BOEING 314 CLIPPER

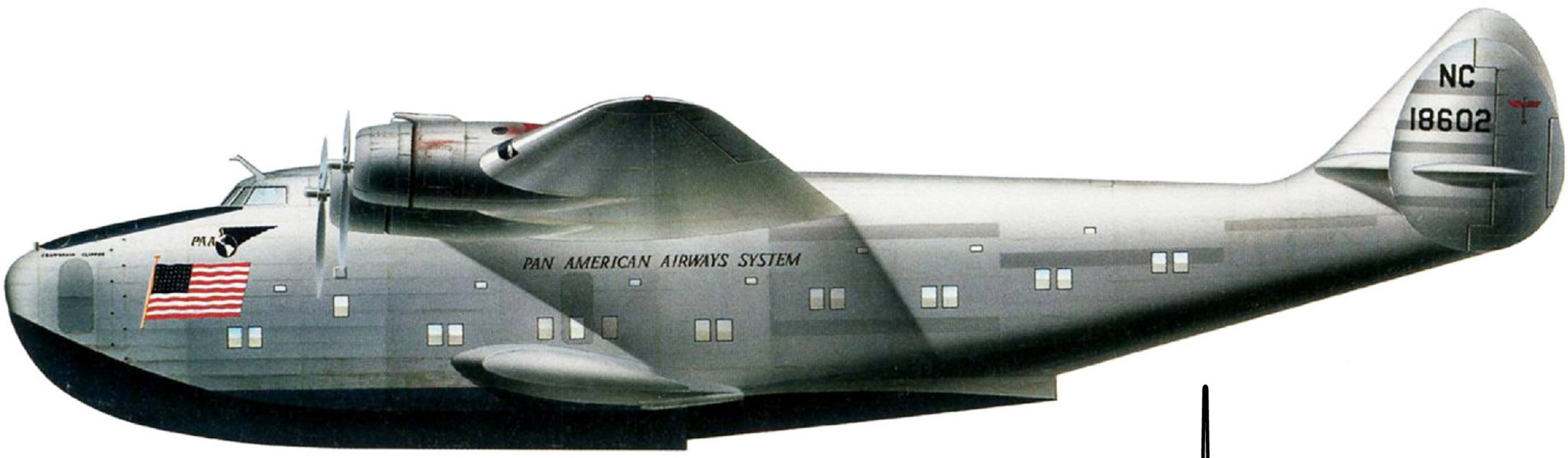

PILOT'S®

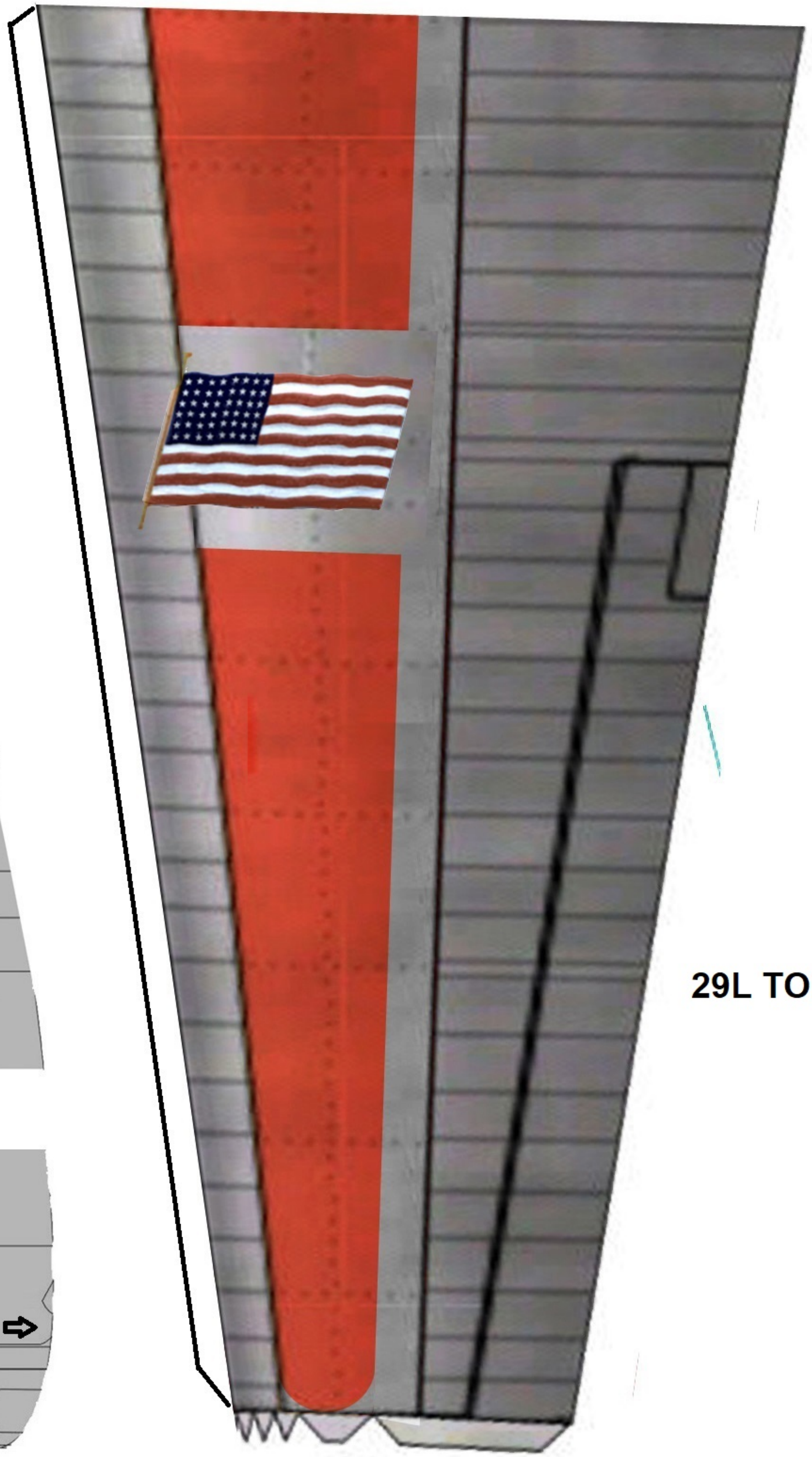
29L TOP

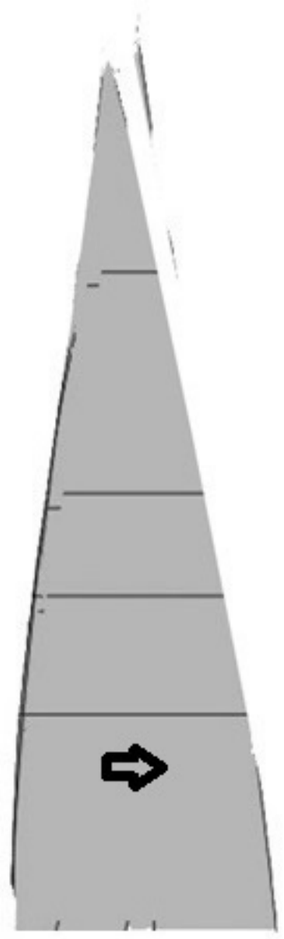
18A

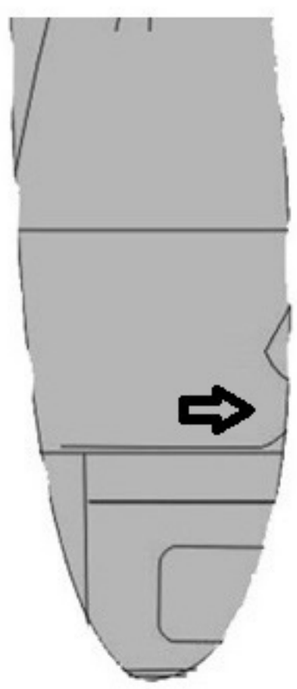
18B

19B

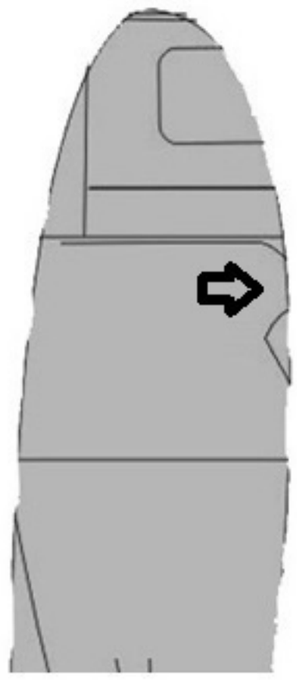

19A

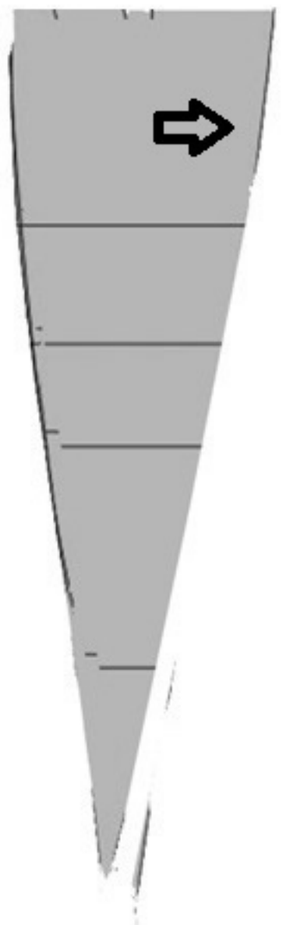

29R TOP

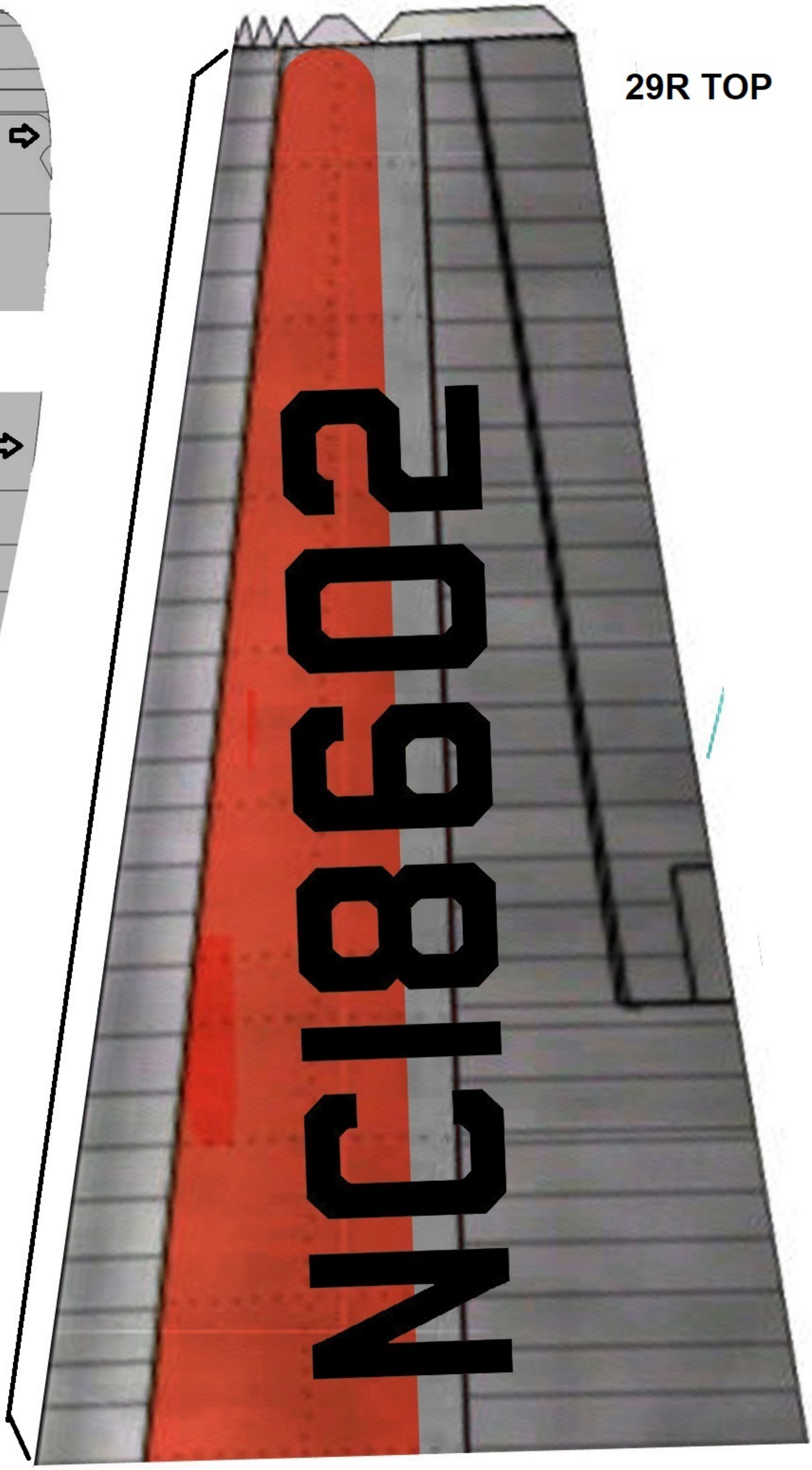

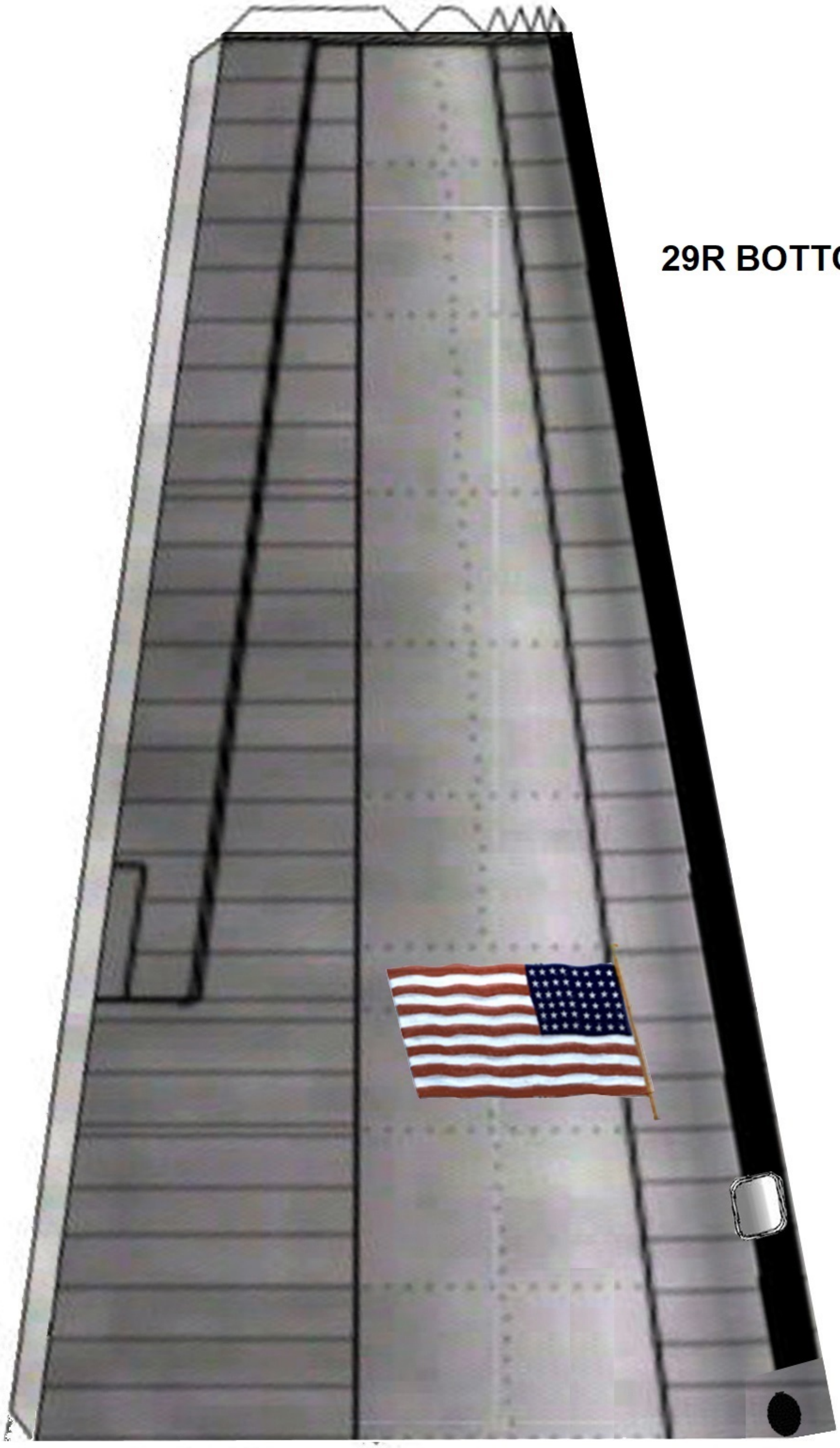

29R BOTTOM

30R

31R

30L

31L

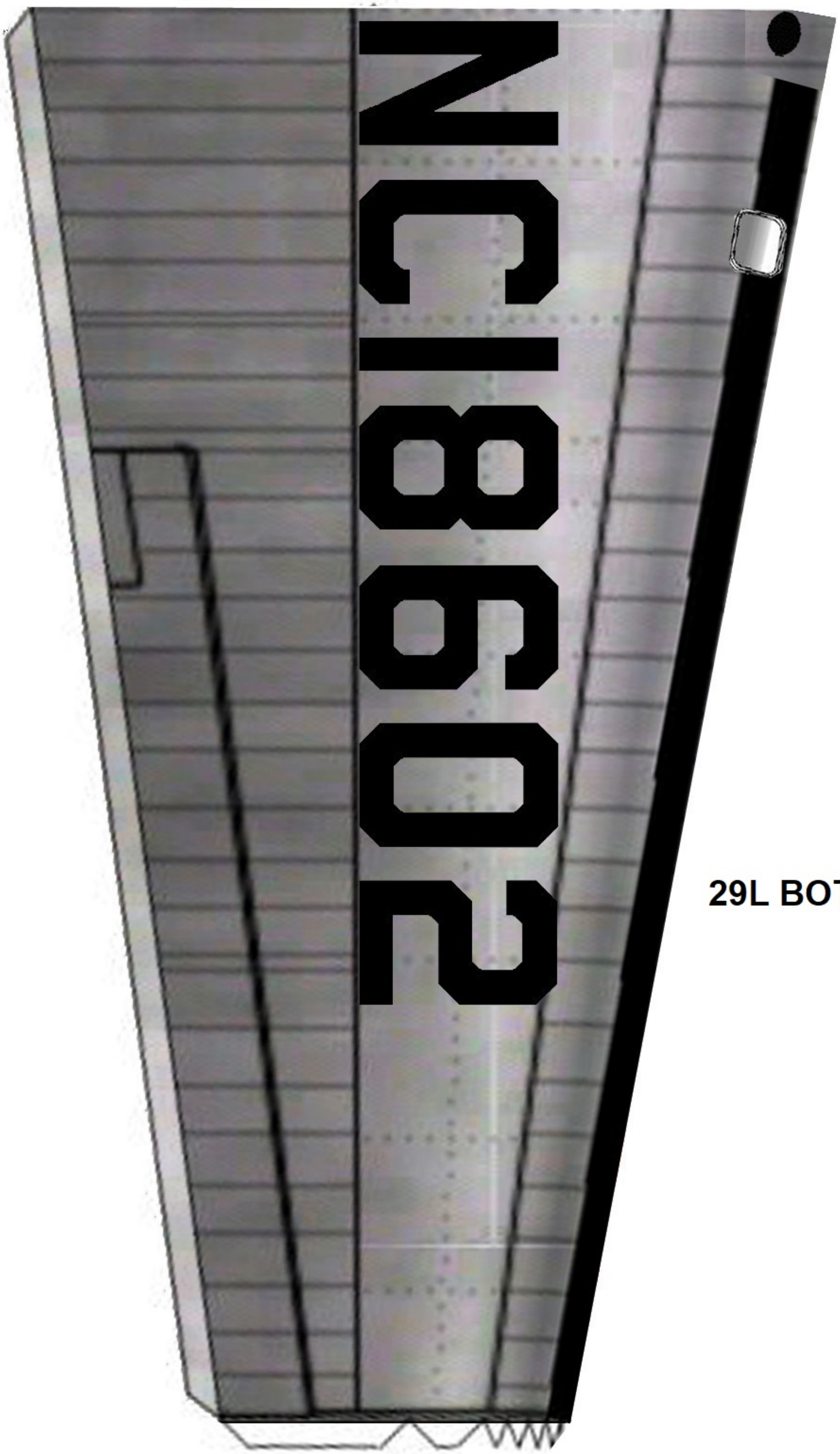

29L BOTTOM

28R
TOP

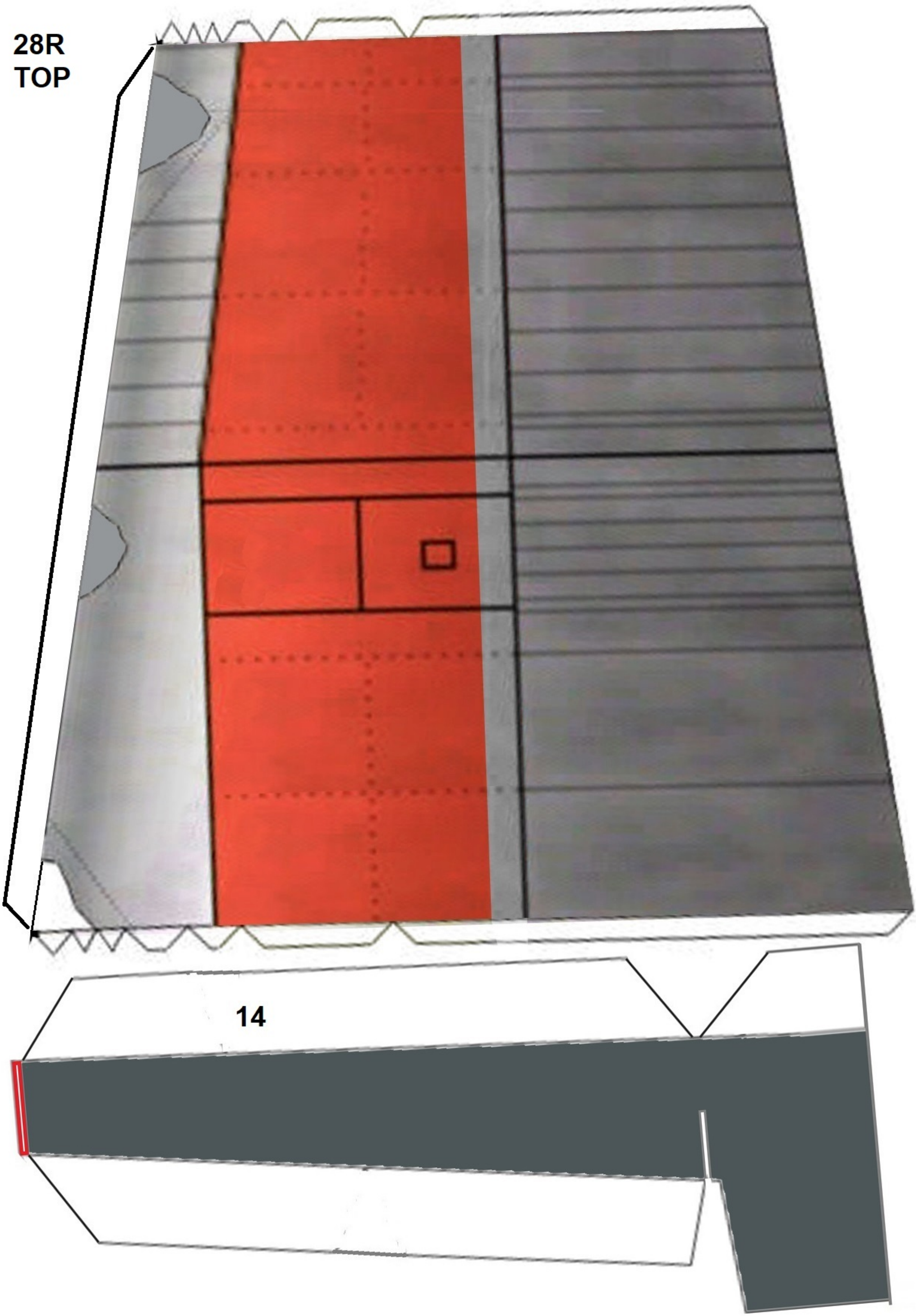

28L
TOP

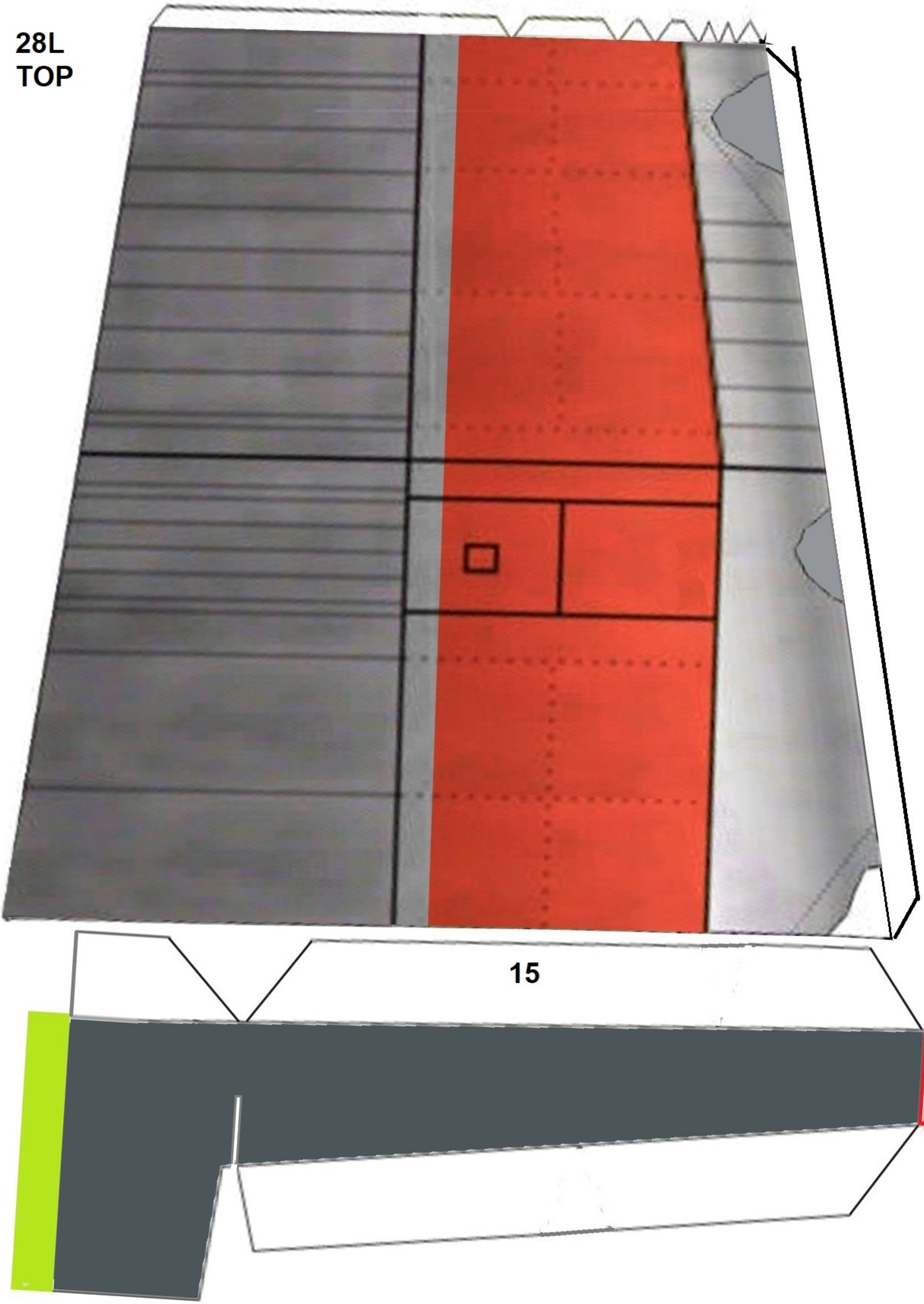

28R
BOTTOM

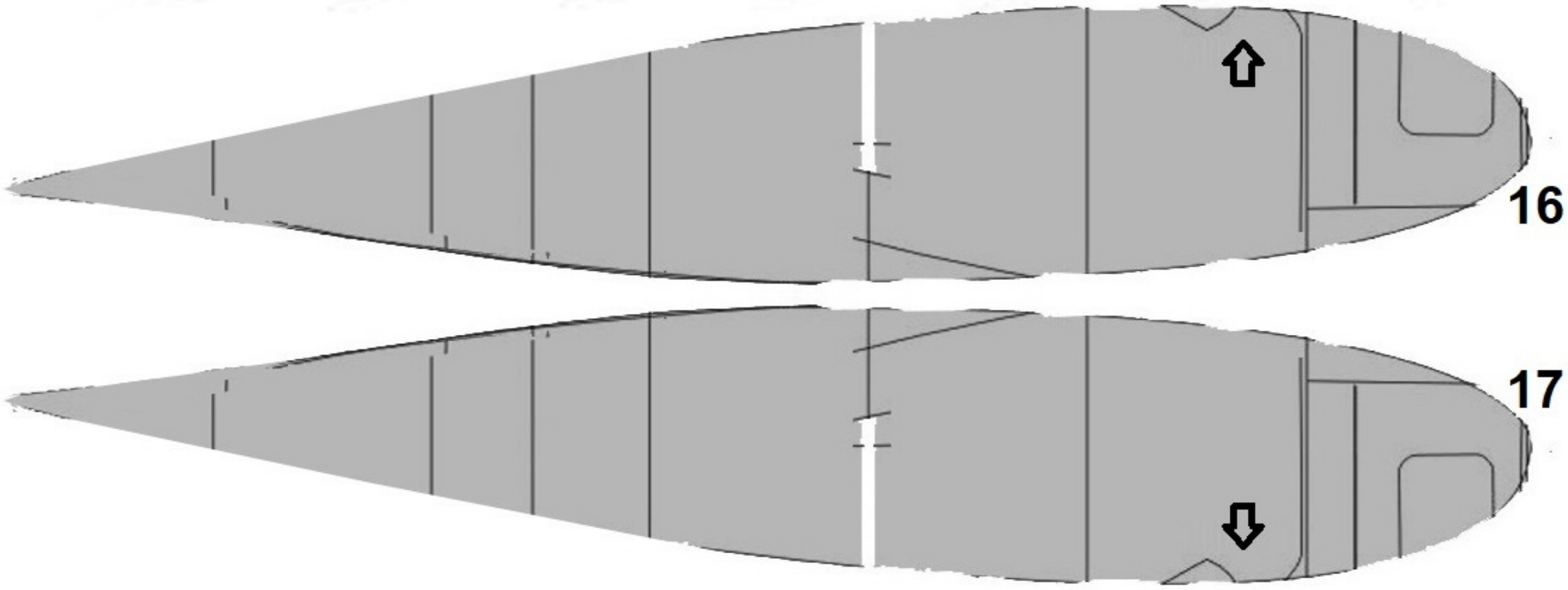

28L
BOTTOM

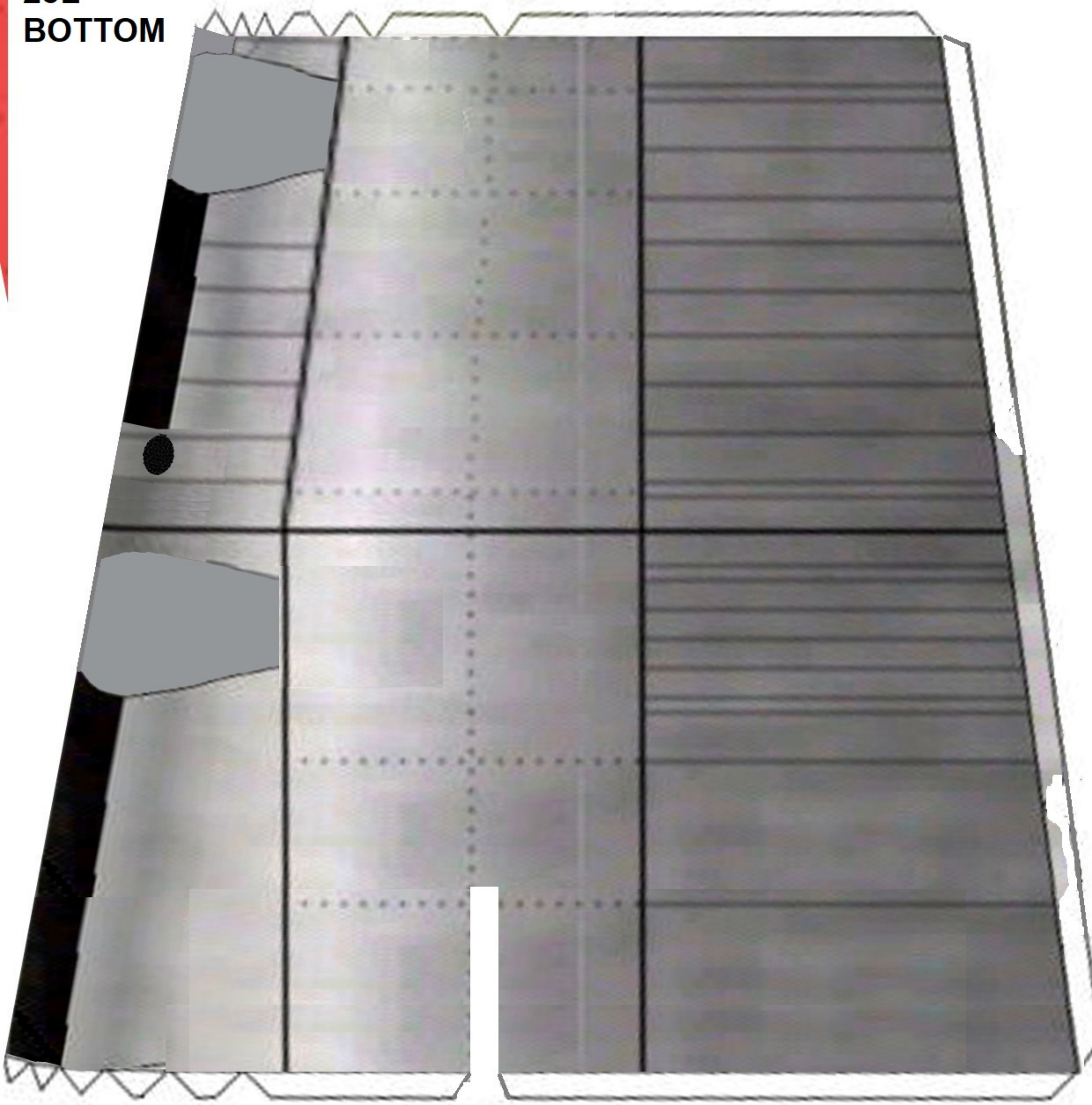

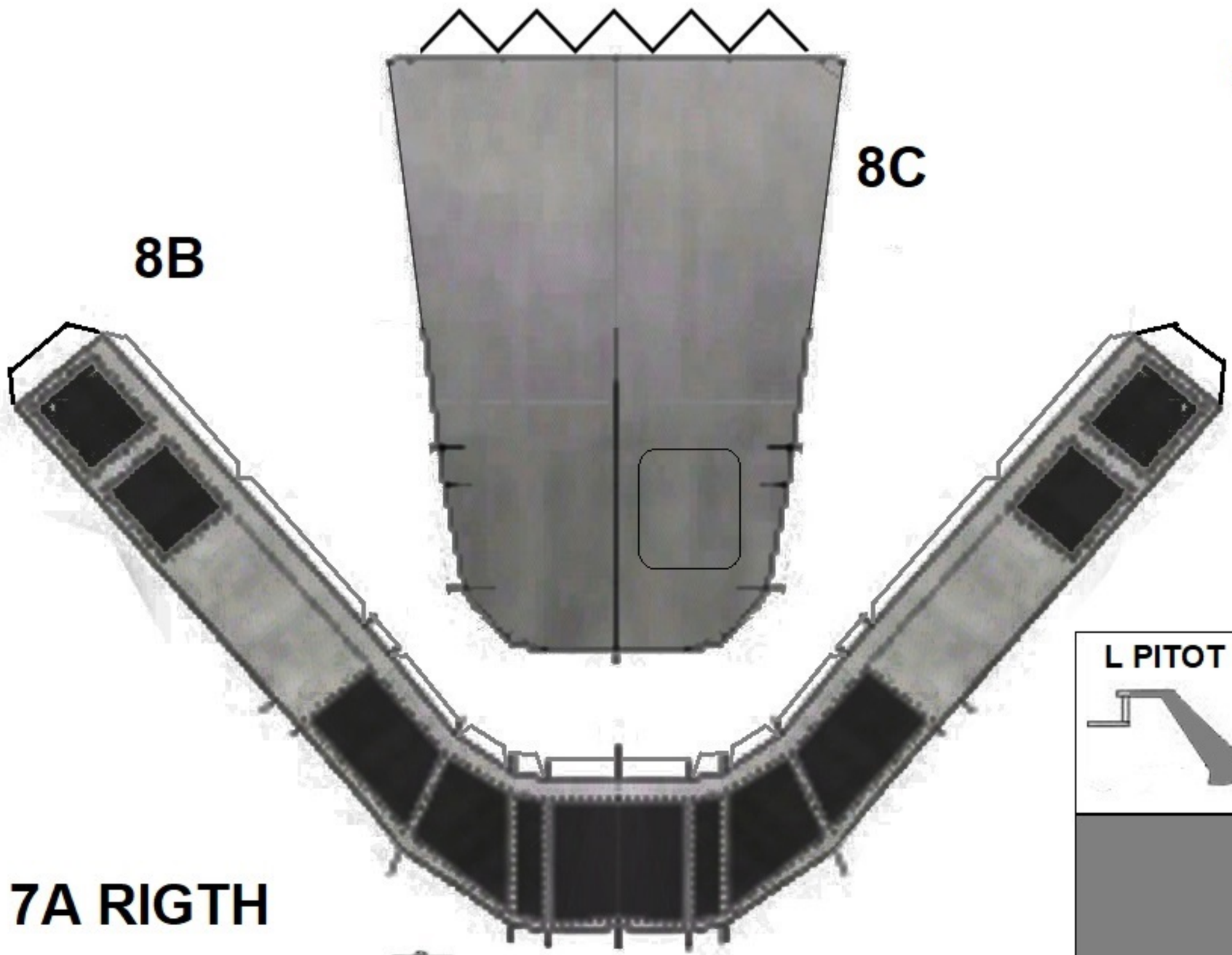
8C
8B

8A LEFT
PAA

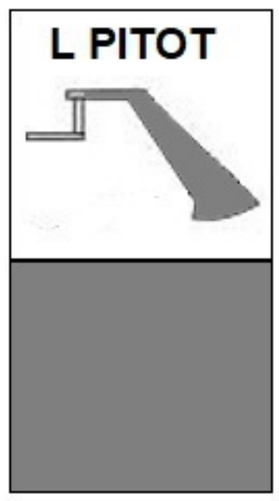
L PITOT

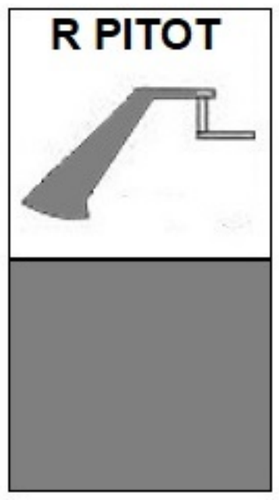
R PITOT

7A RIGTH

6A RIGHT

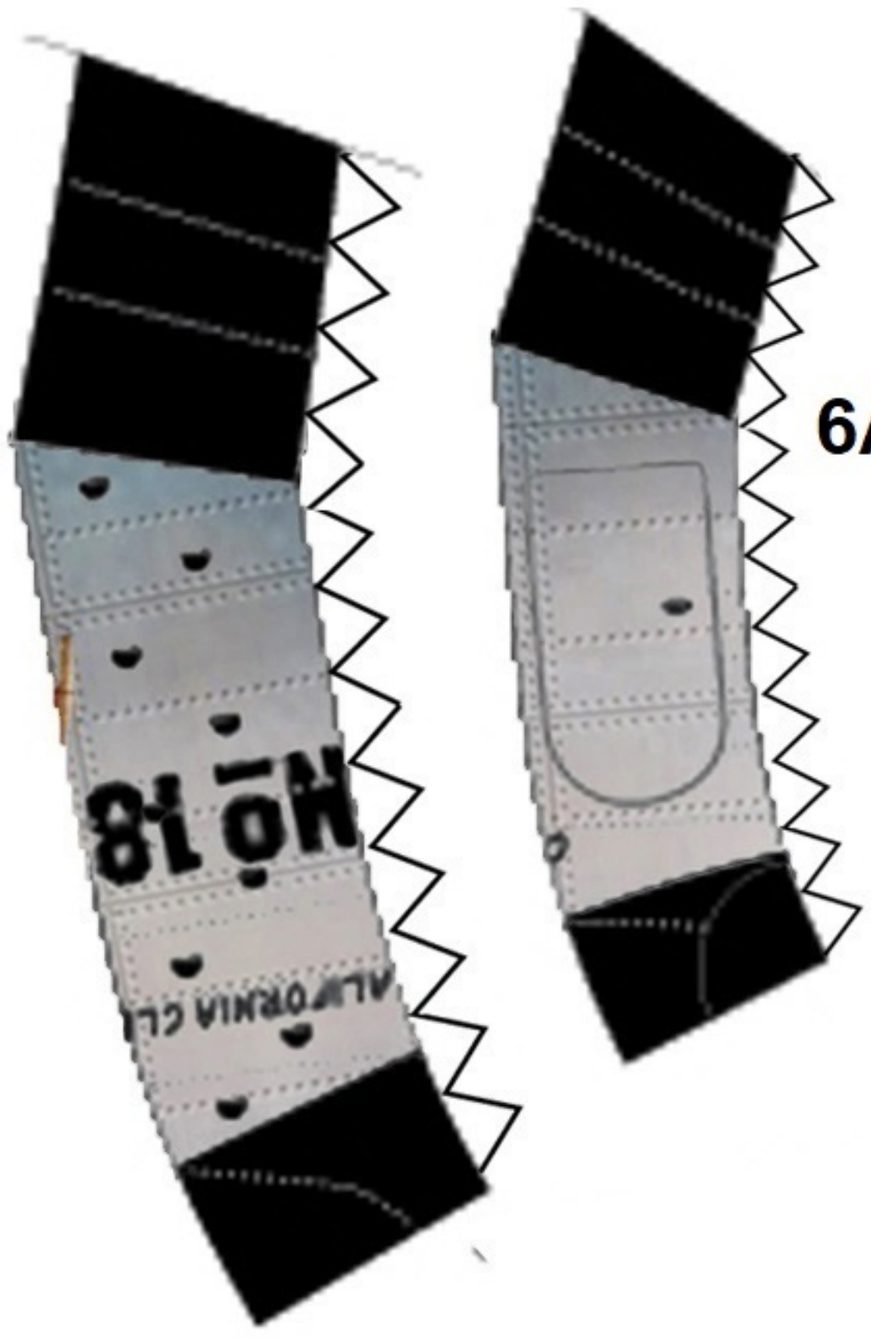
7A LEFT
6A LEFT

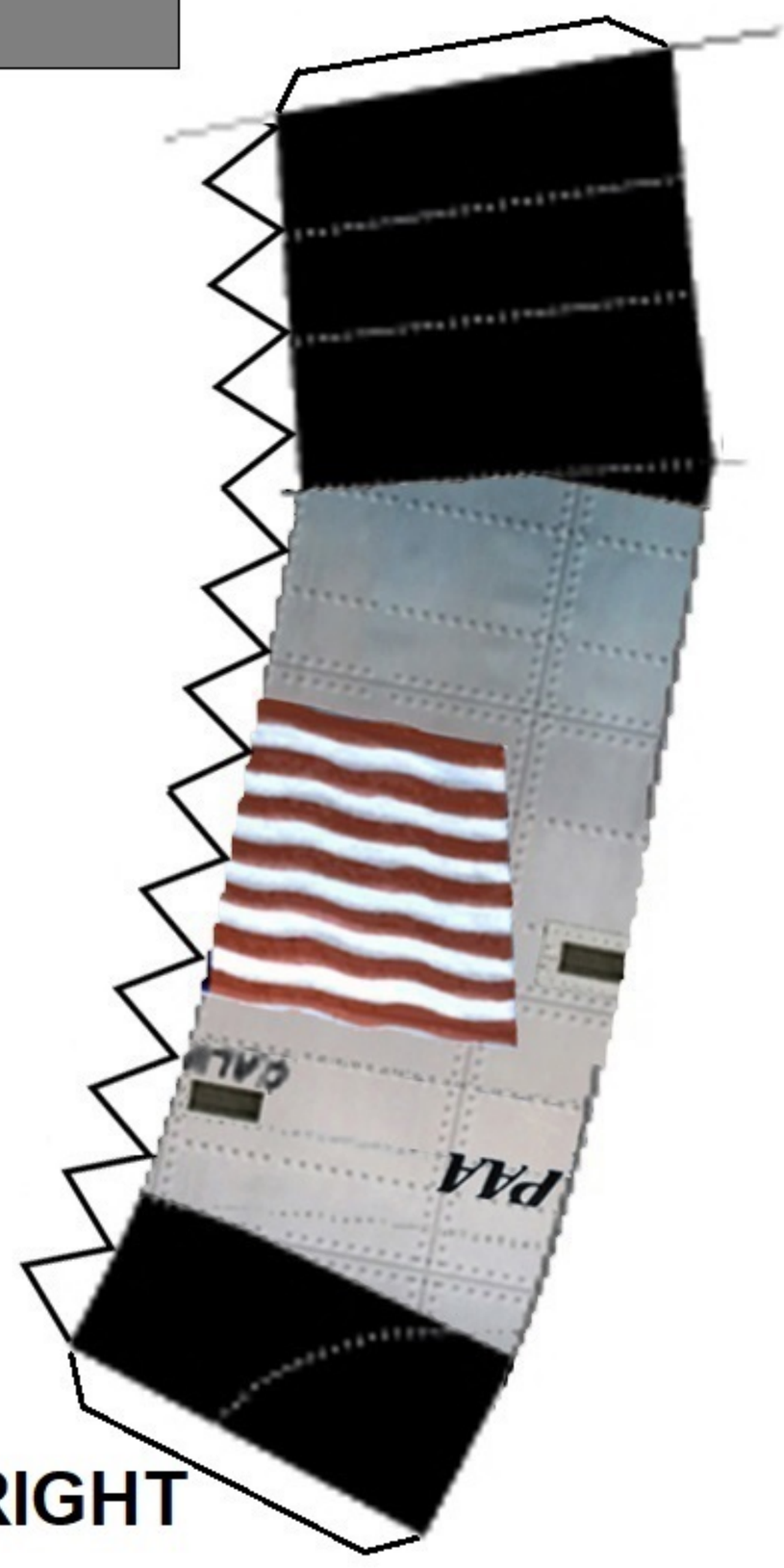
8A RIGHT

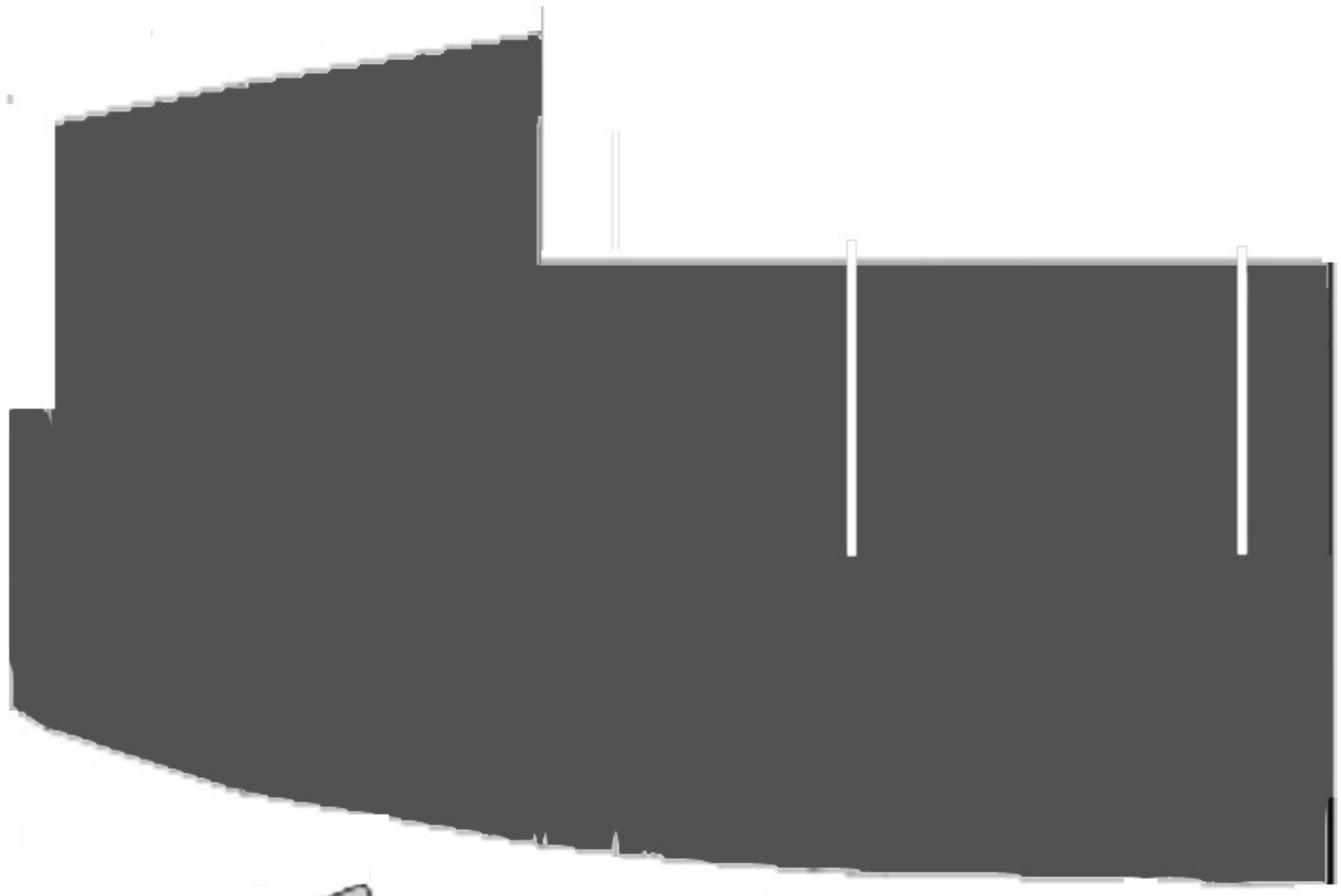
1

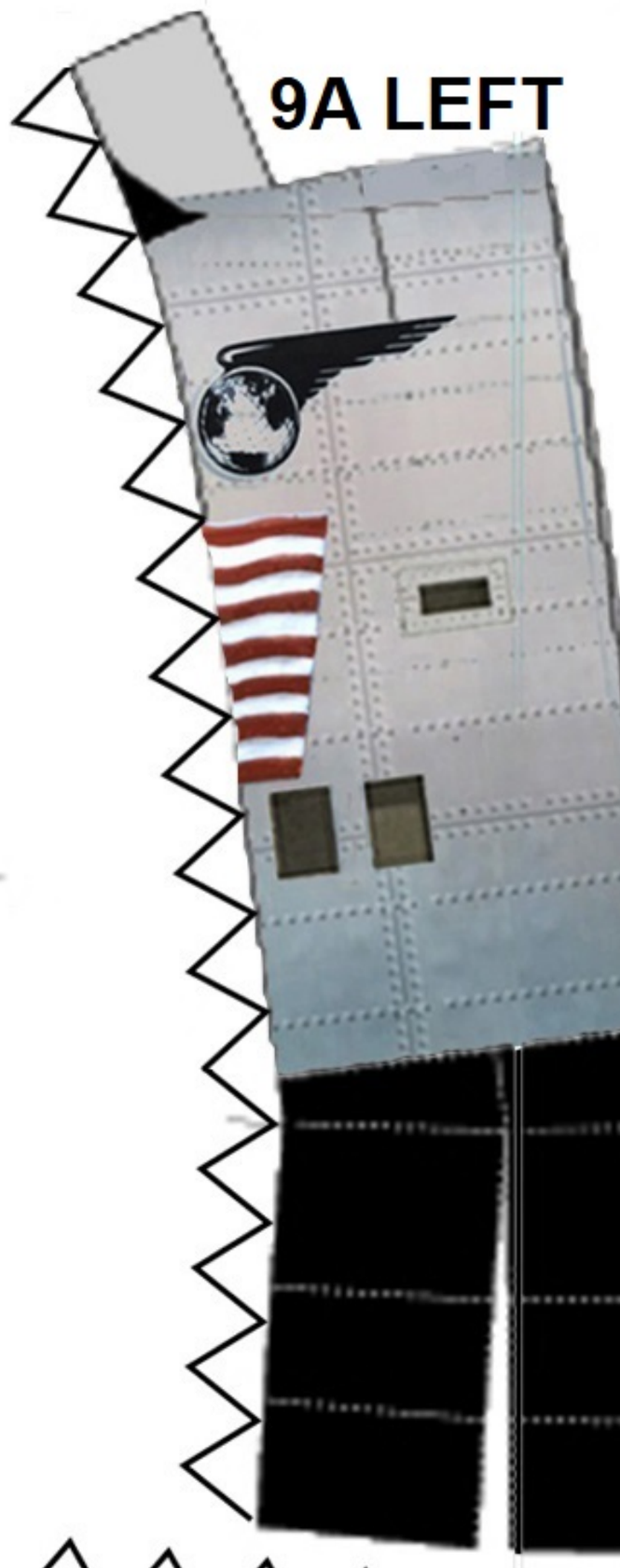
9A LEFT

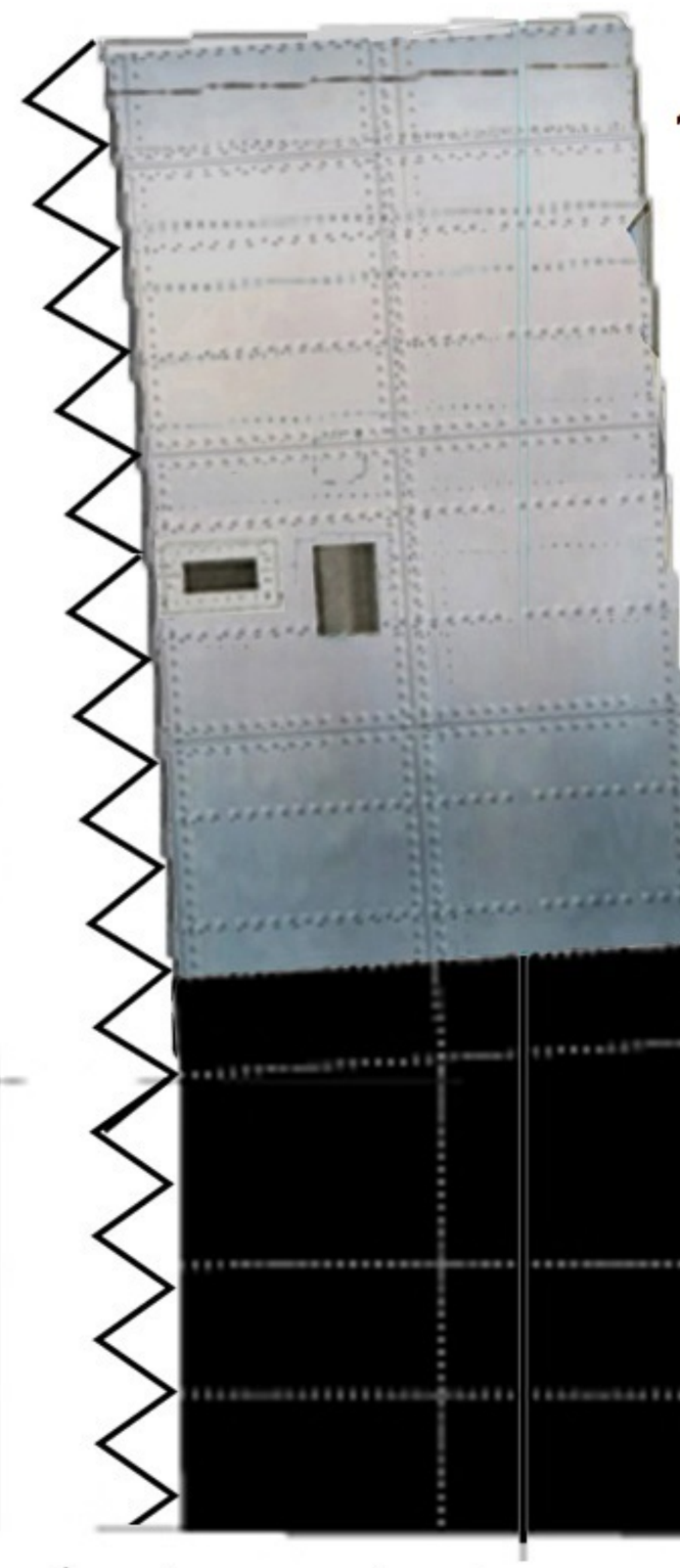
10A
LEFT

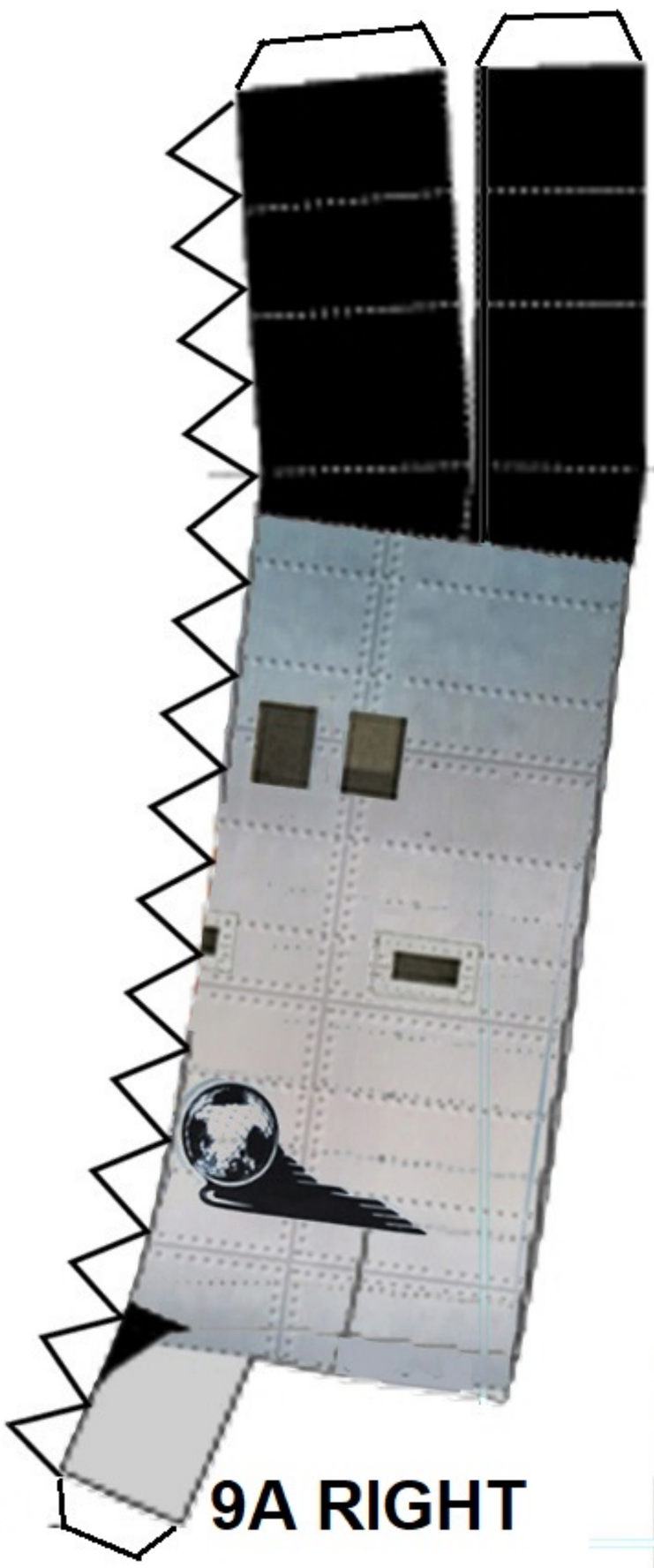
9A RIGHT

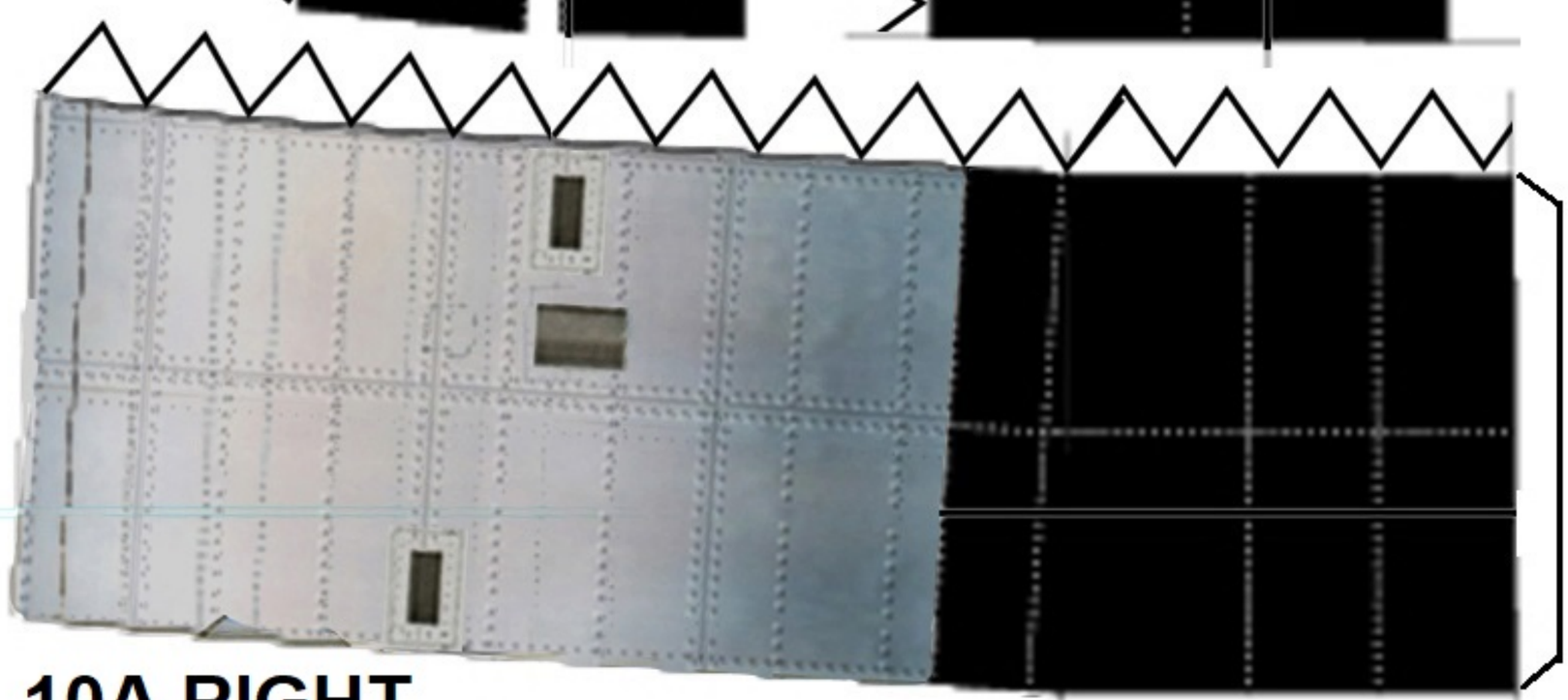
10A RIGHT

11A RIGHT

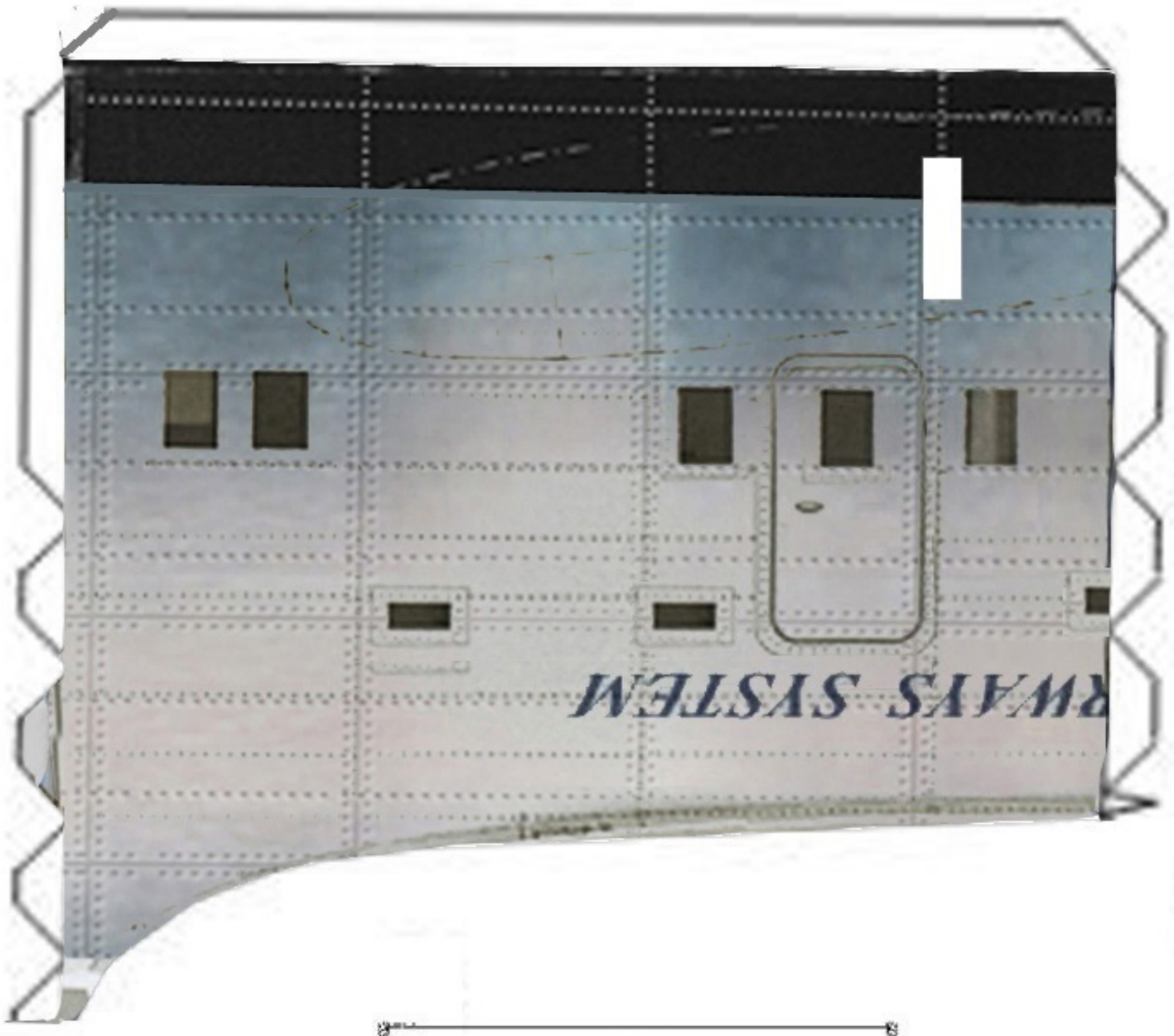

8

ADF
ANTENNA

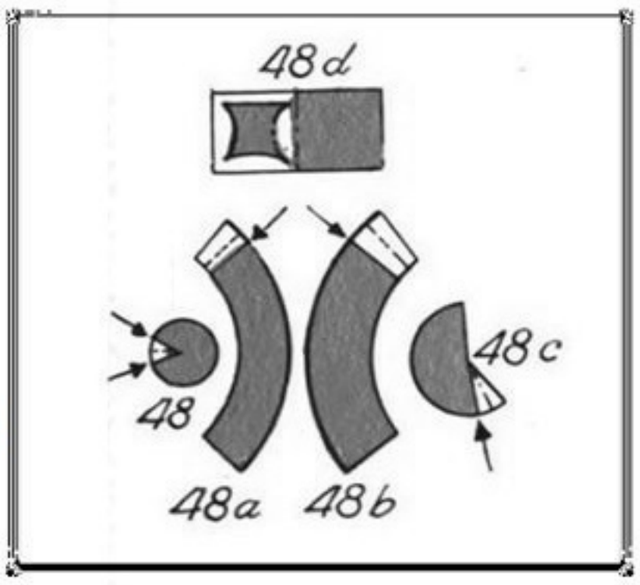

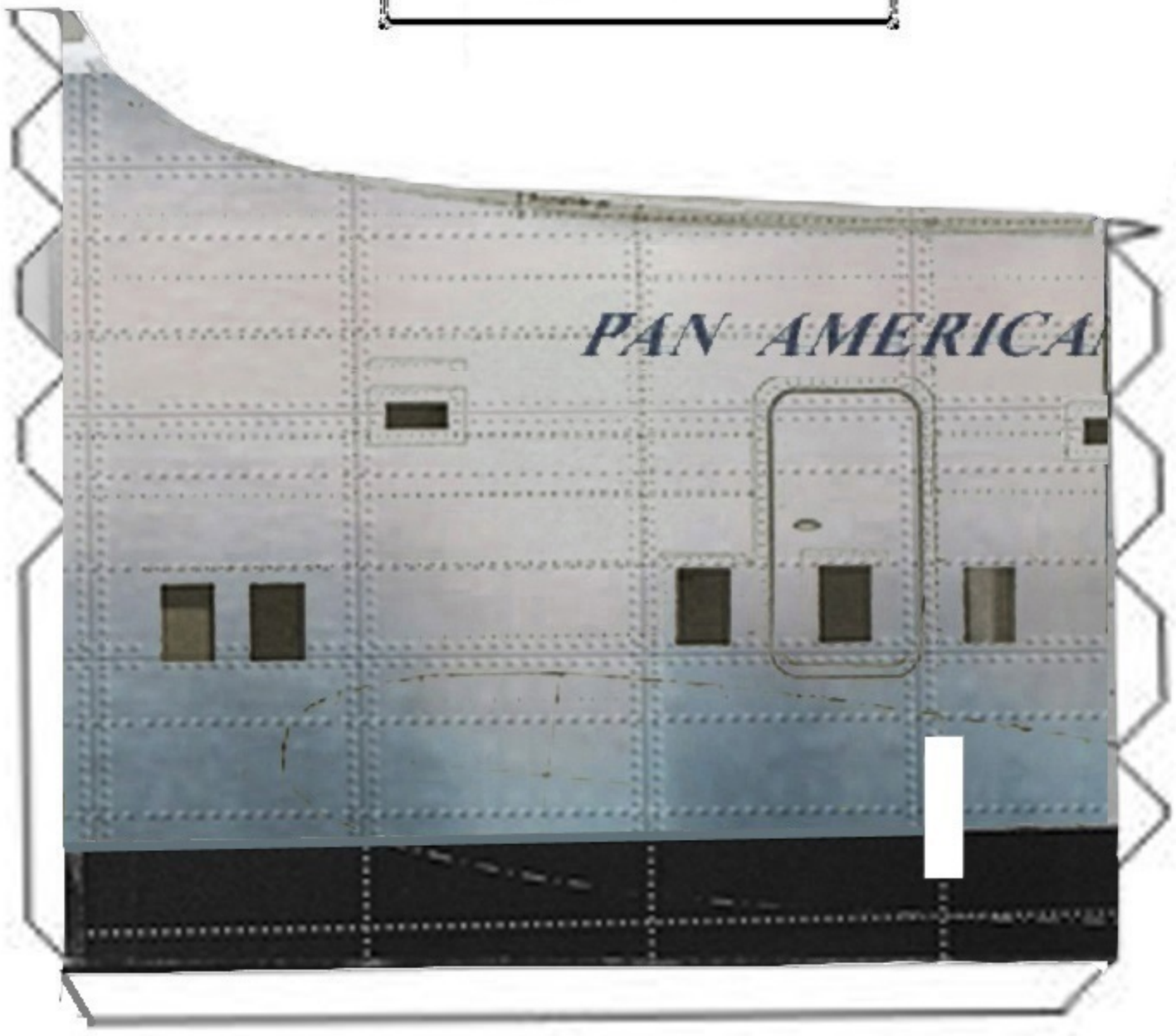

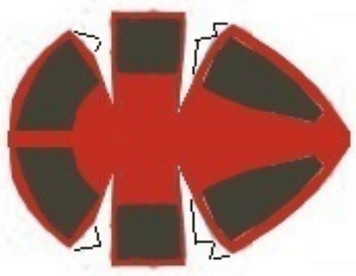

28

28A

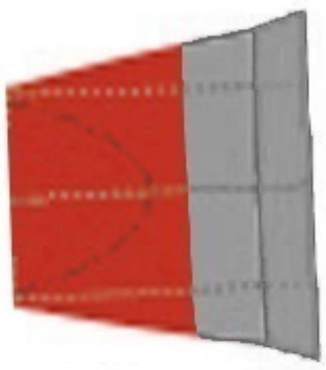

12C

11A LEFT

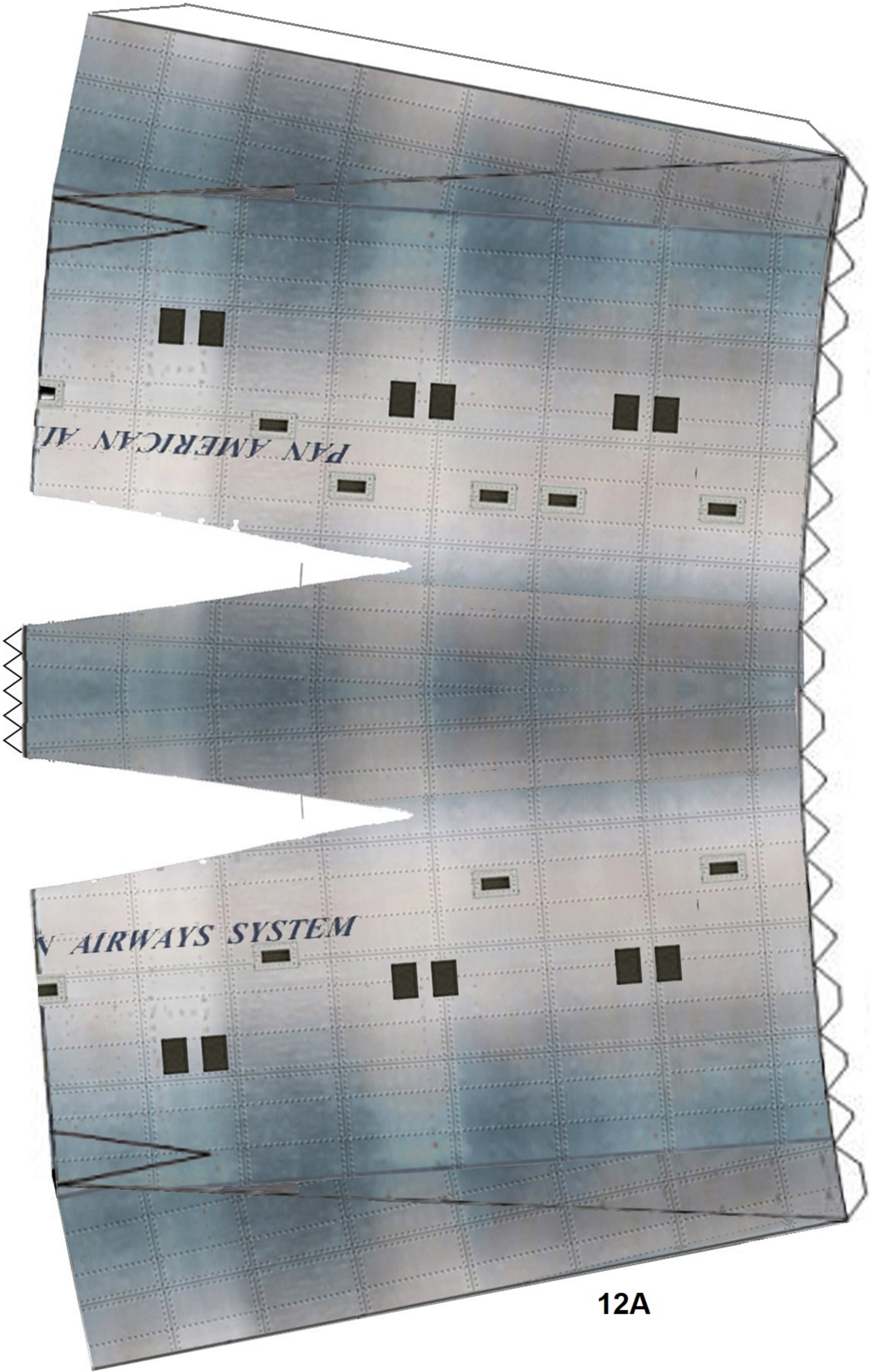

12A

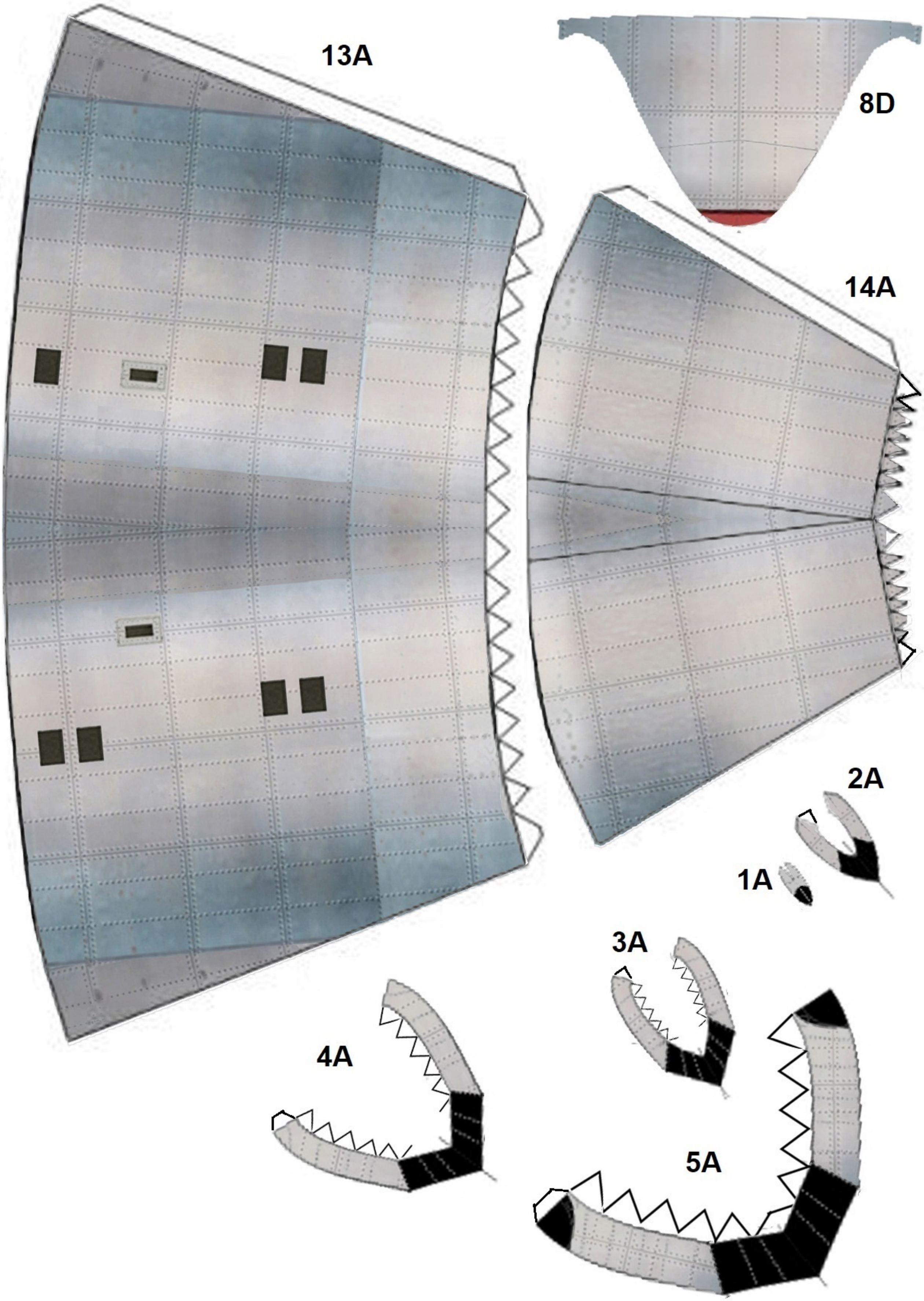
13A
8D
14A
2A
1A
3A
4A
5A

LEFT FLOAT
TOP

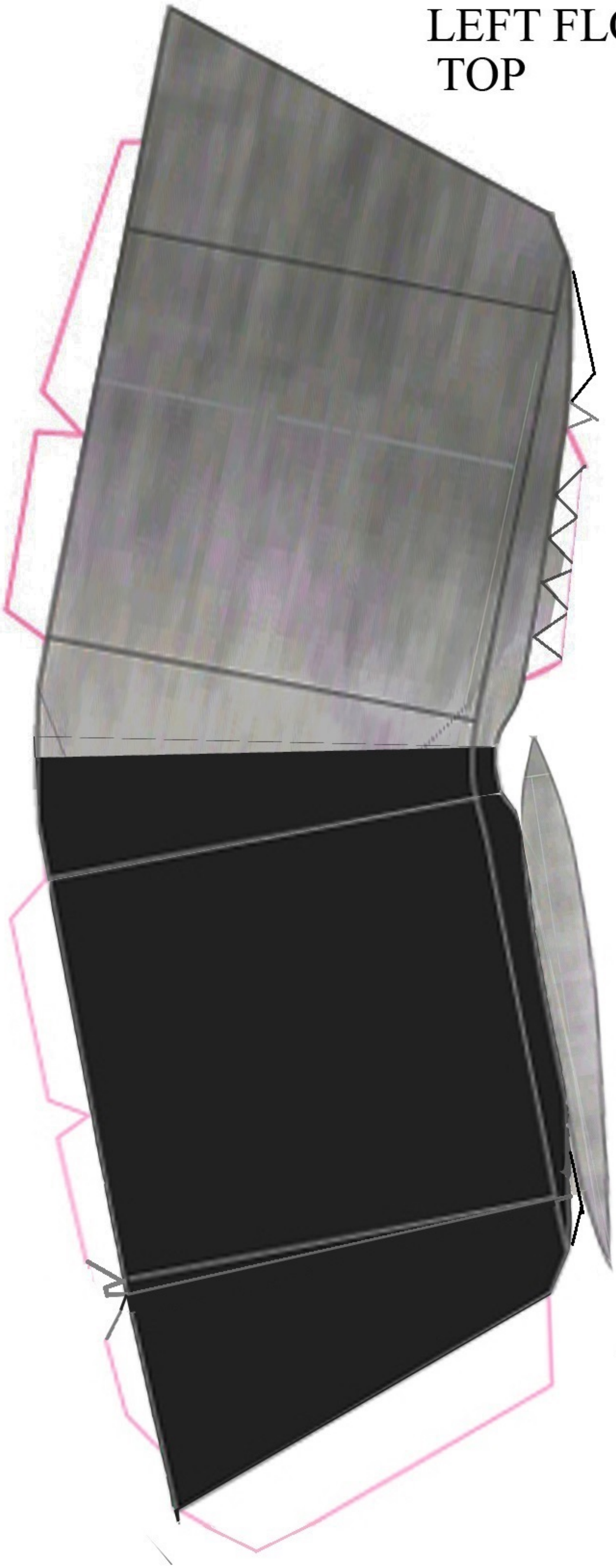

27L

26R

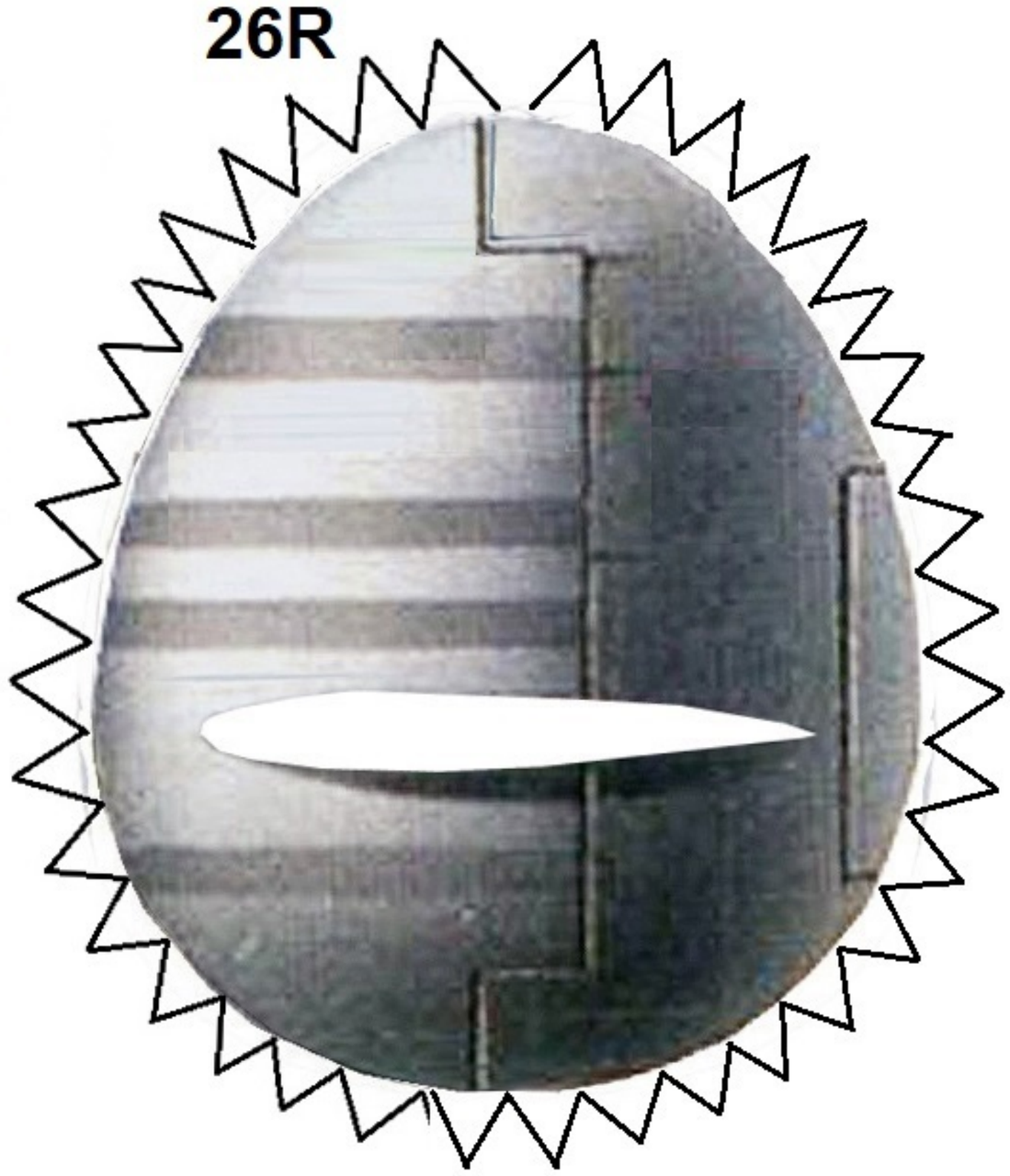

RIGHT FLOAT

TOP

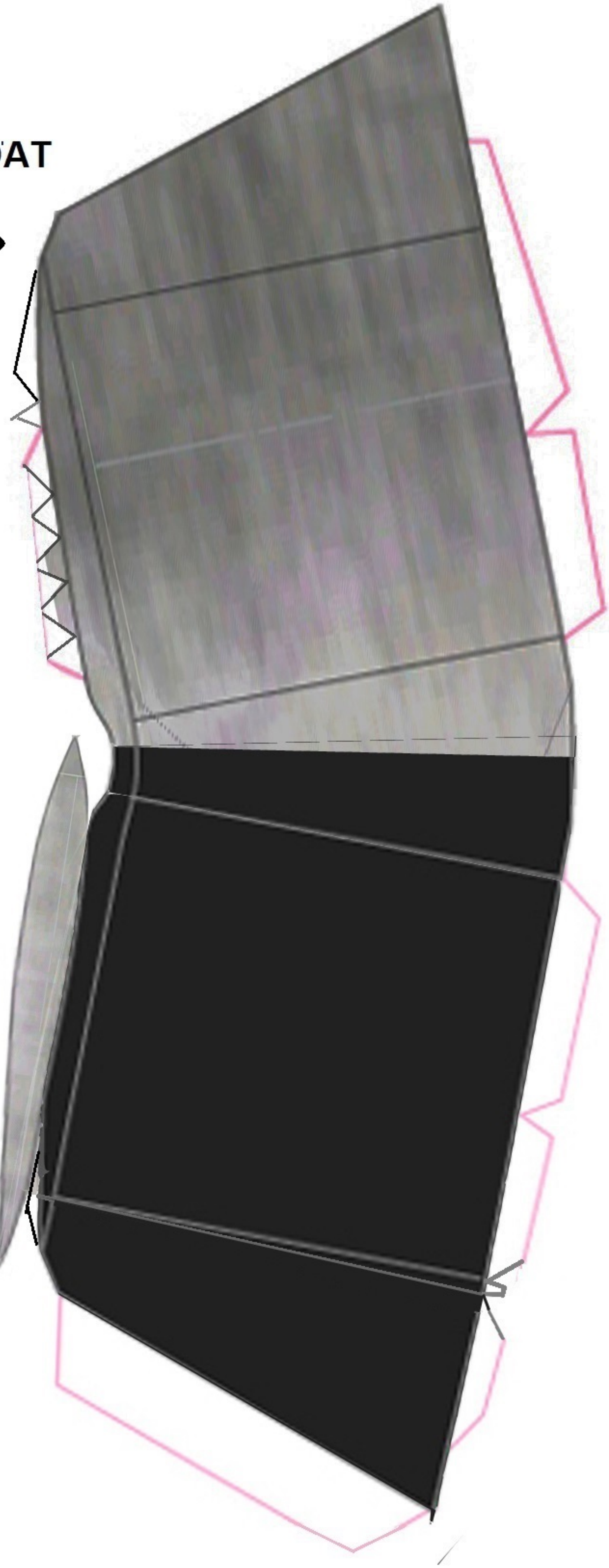

27R

26L

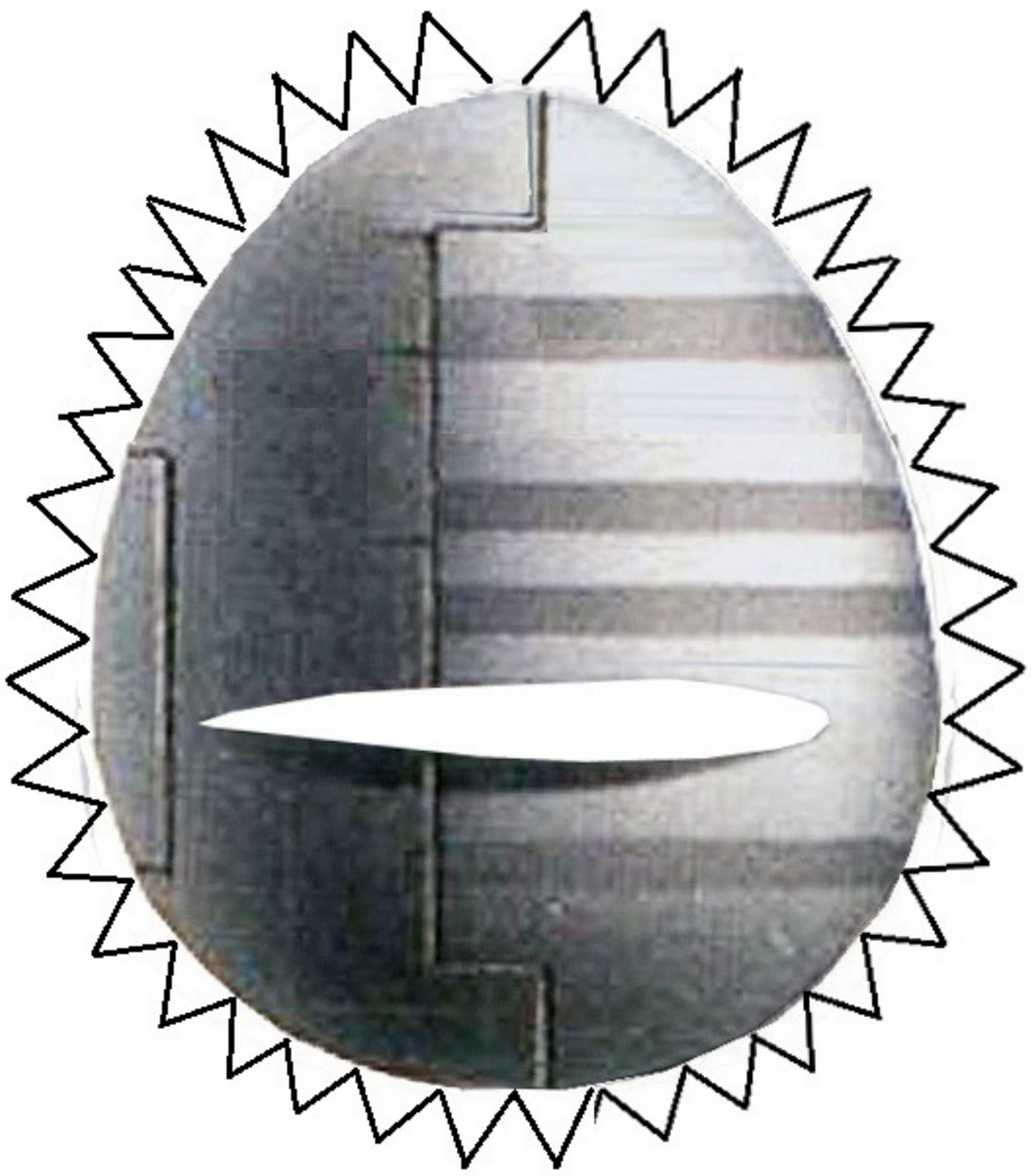

23

21

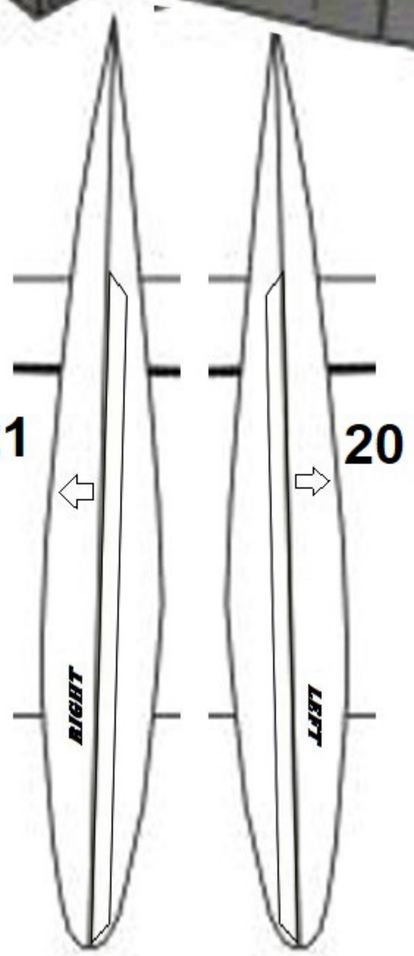

20

22

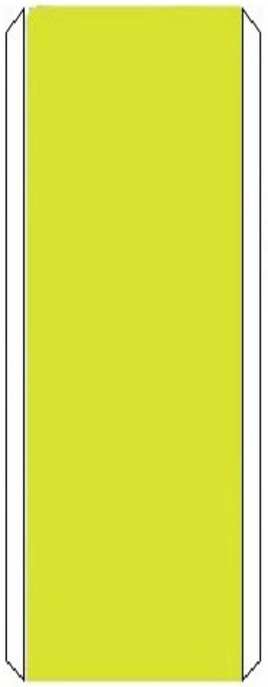

25L

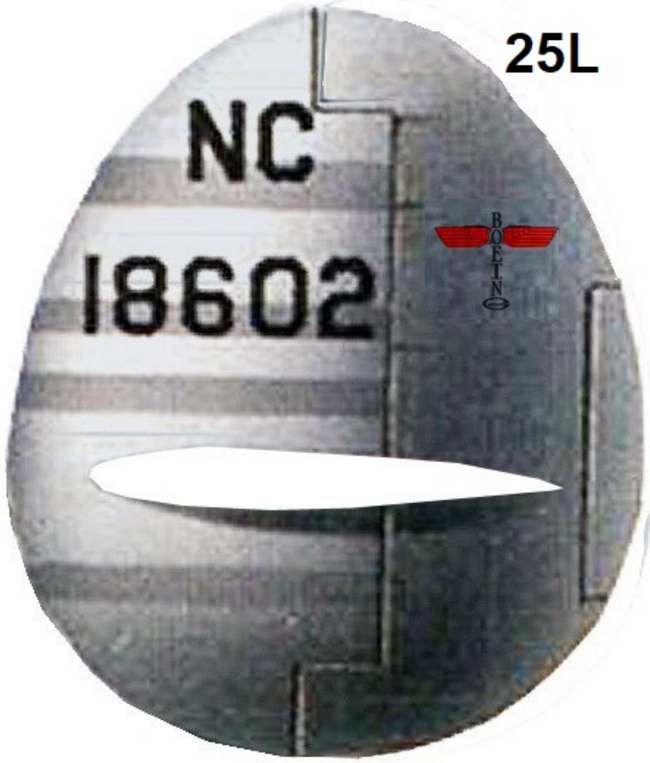

25R

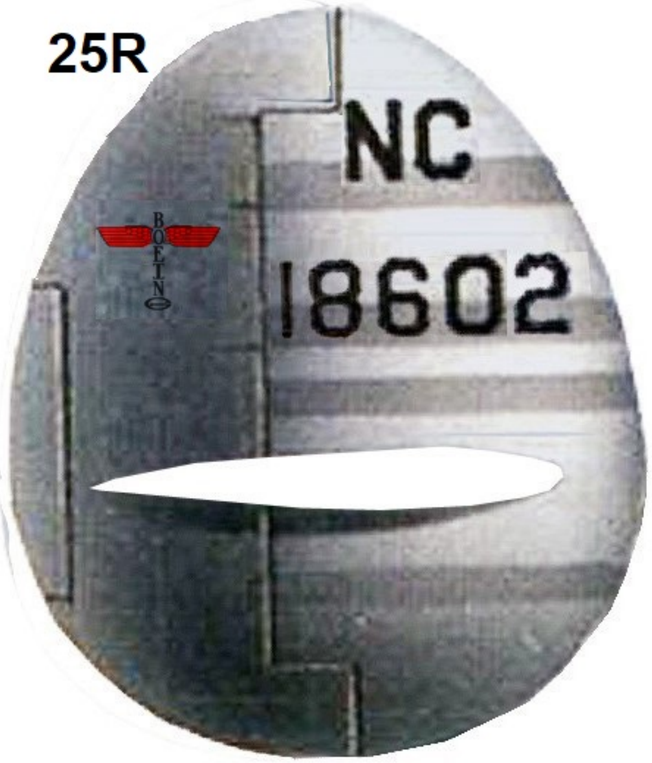

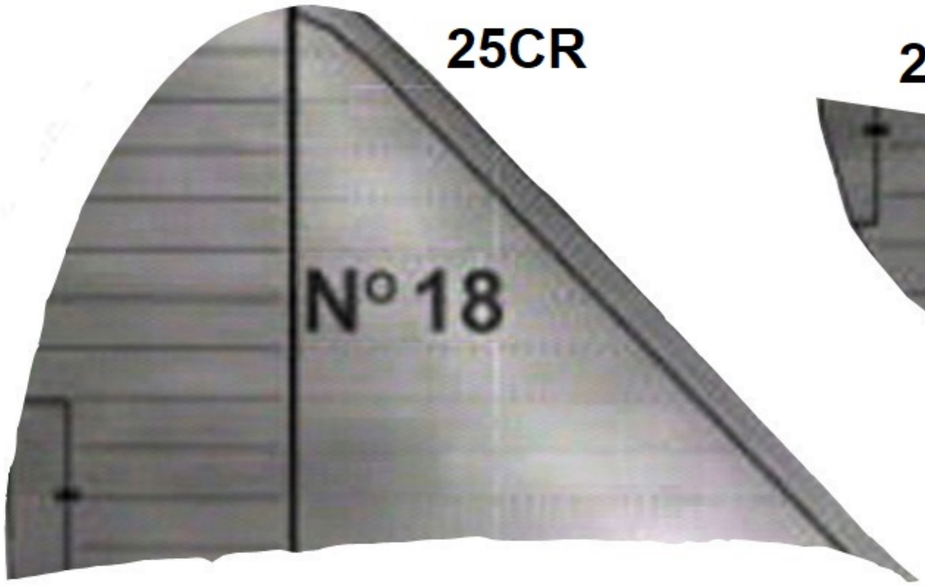
25CR
N° 18

25BR

25BL

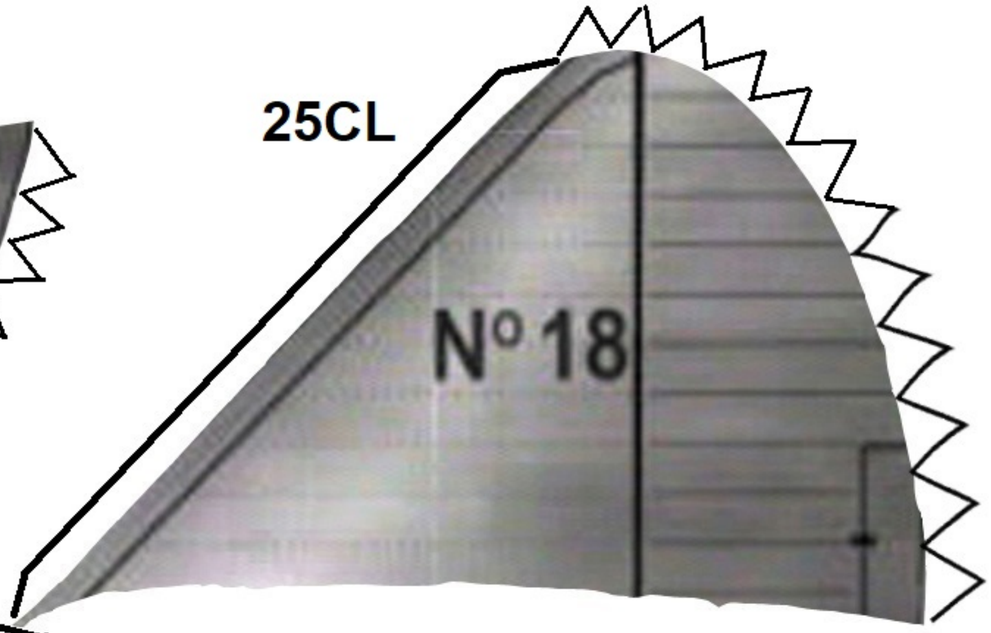
25CL
N° 18

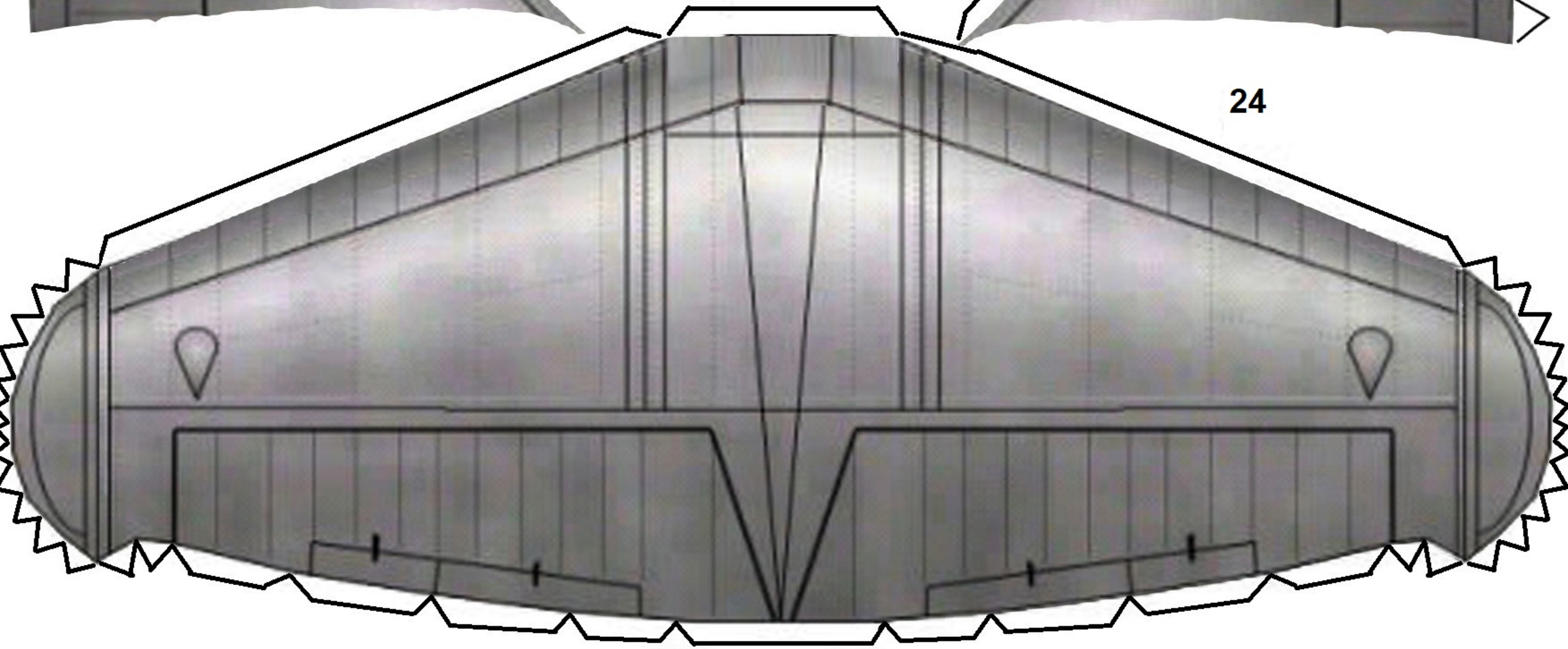
24

24F

9

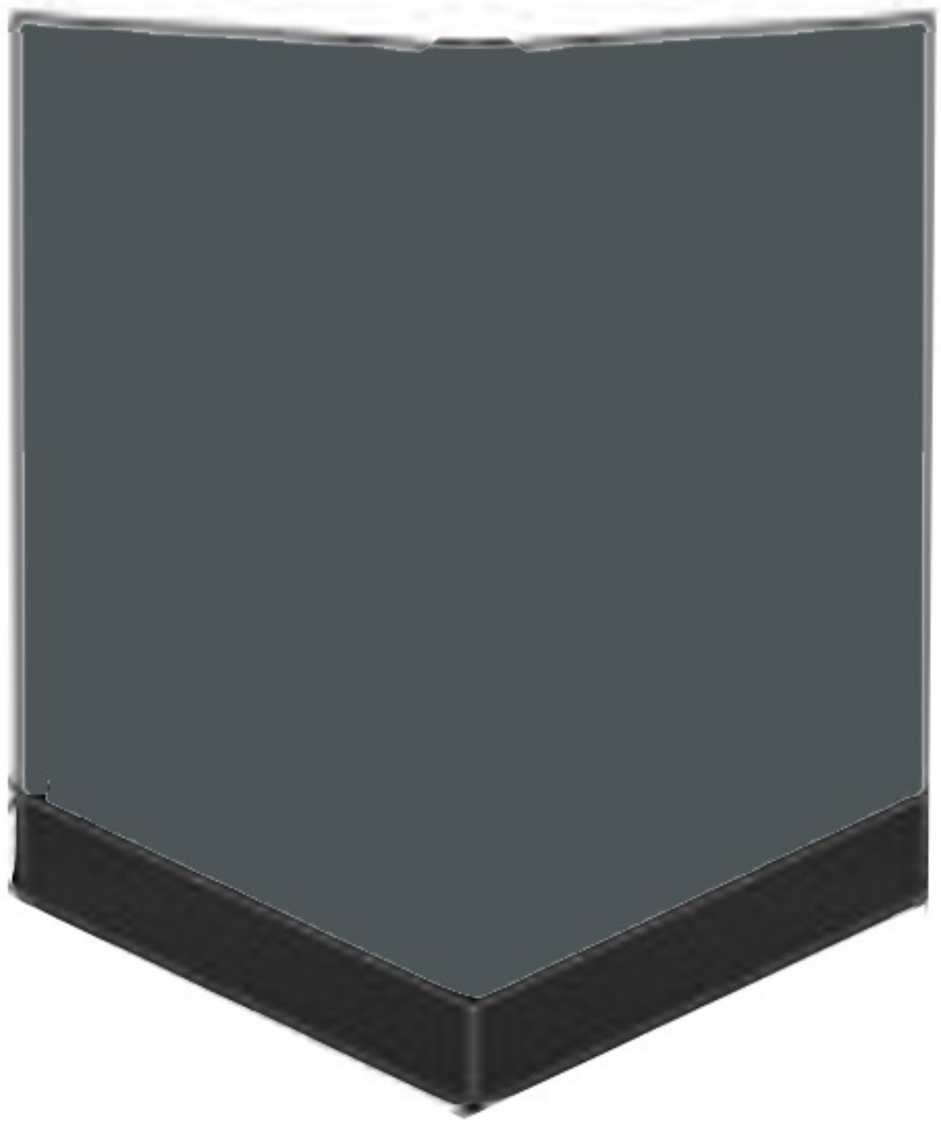

11 BOTTOM

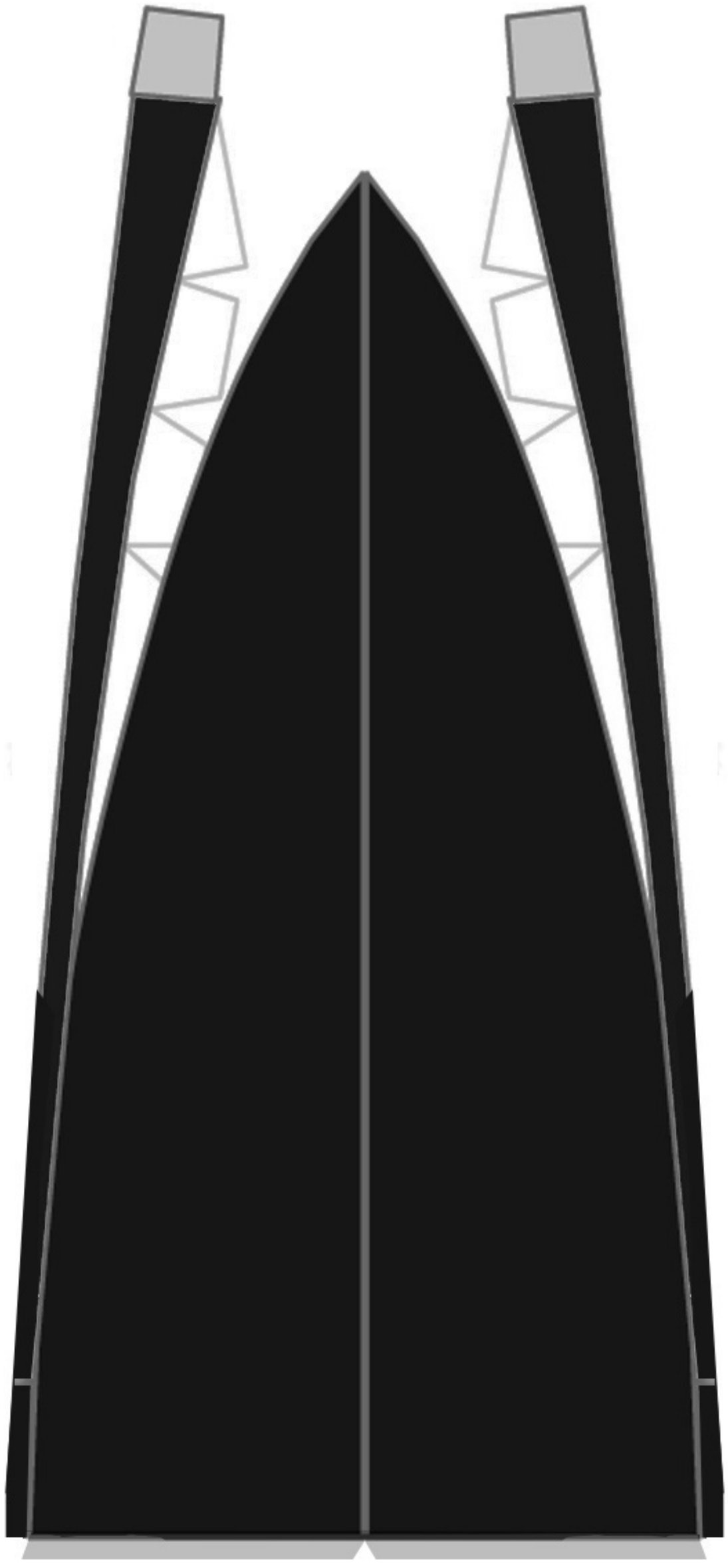

12 BOTTOM

Left wing

36

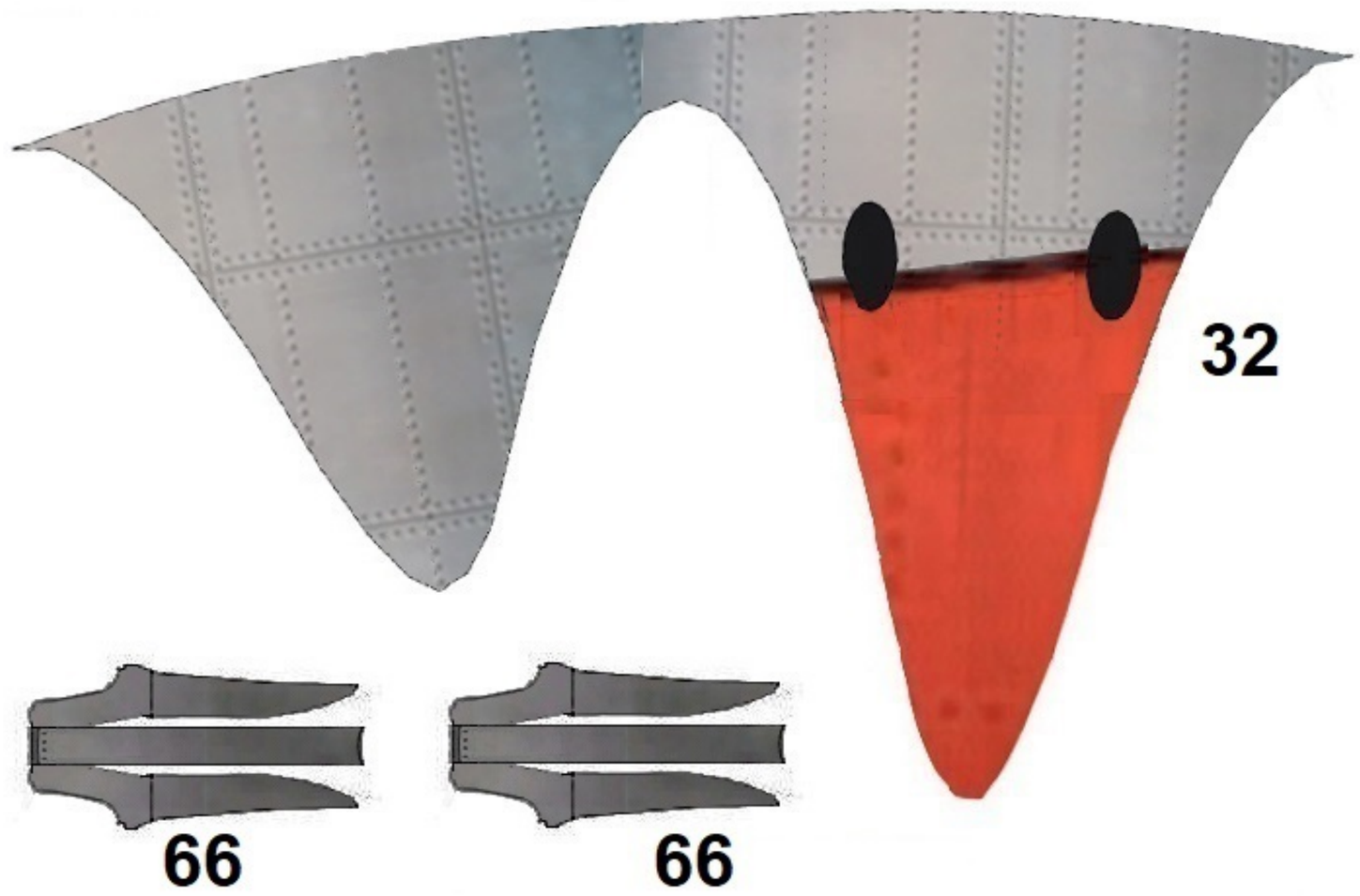

32

66 66

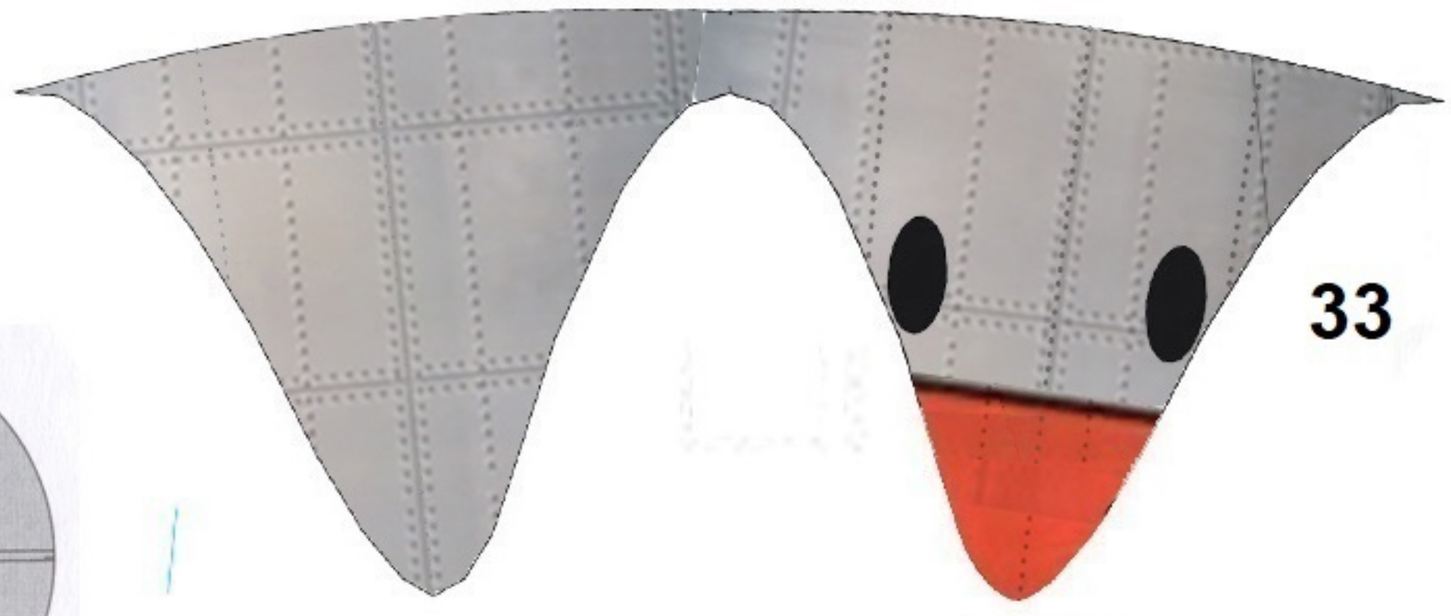

33

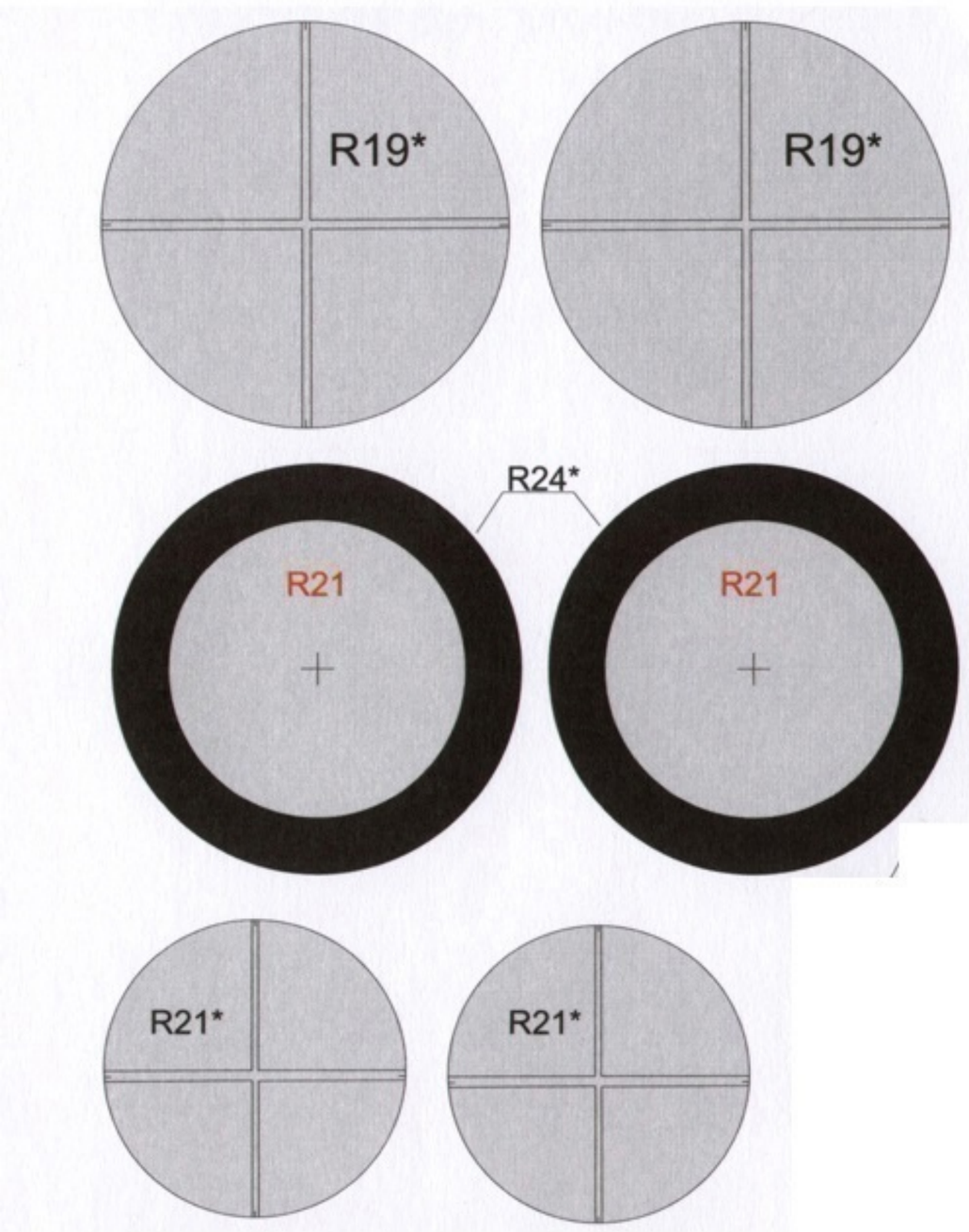

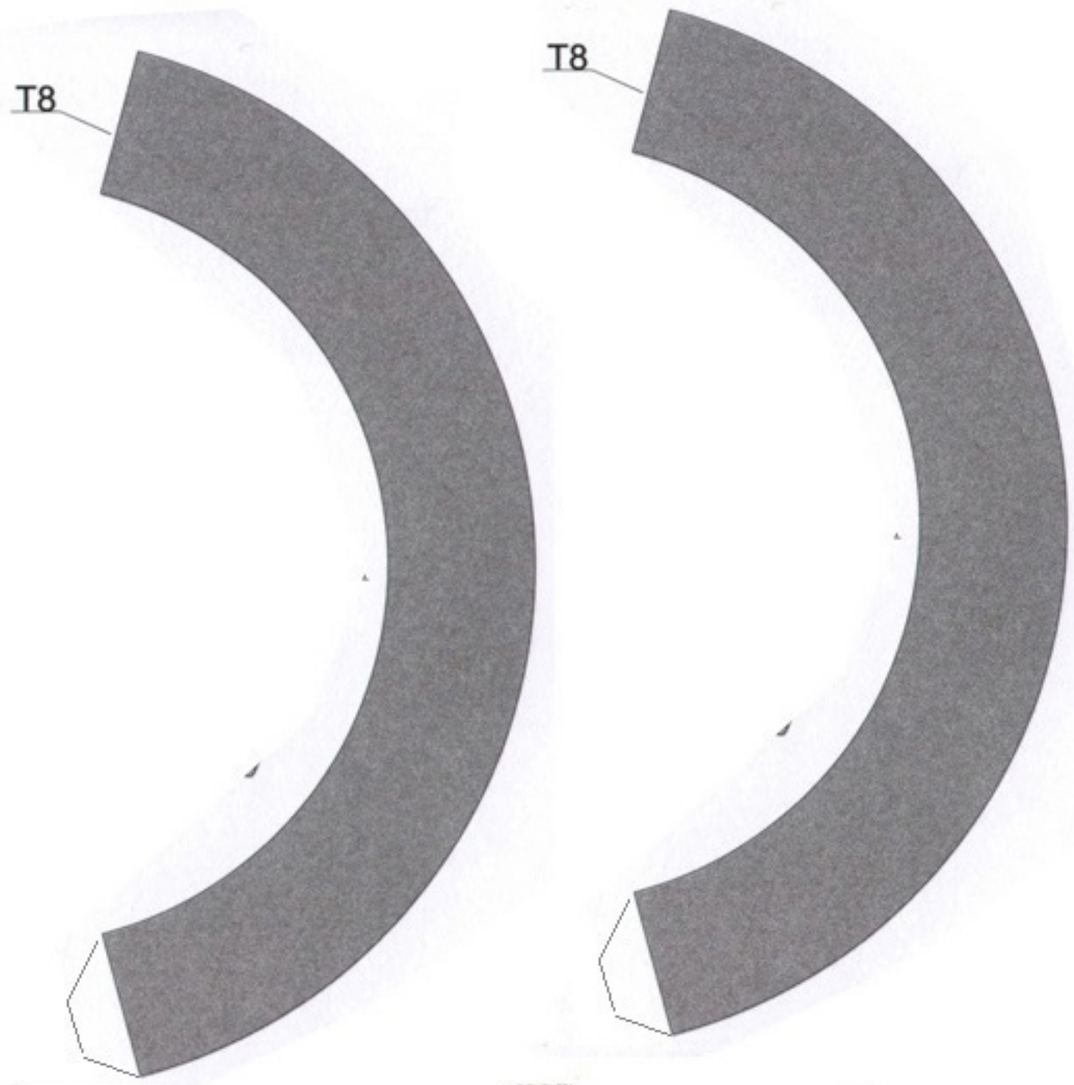

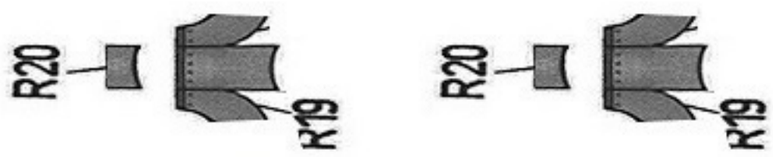

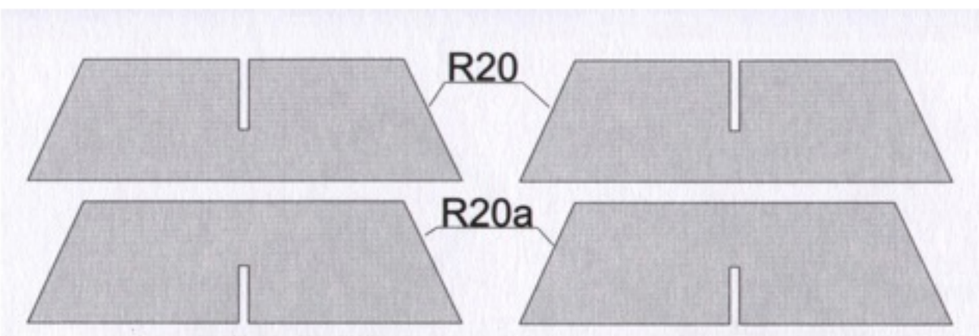

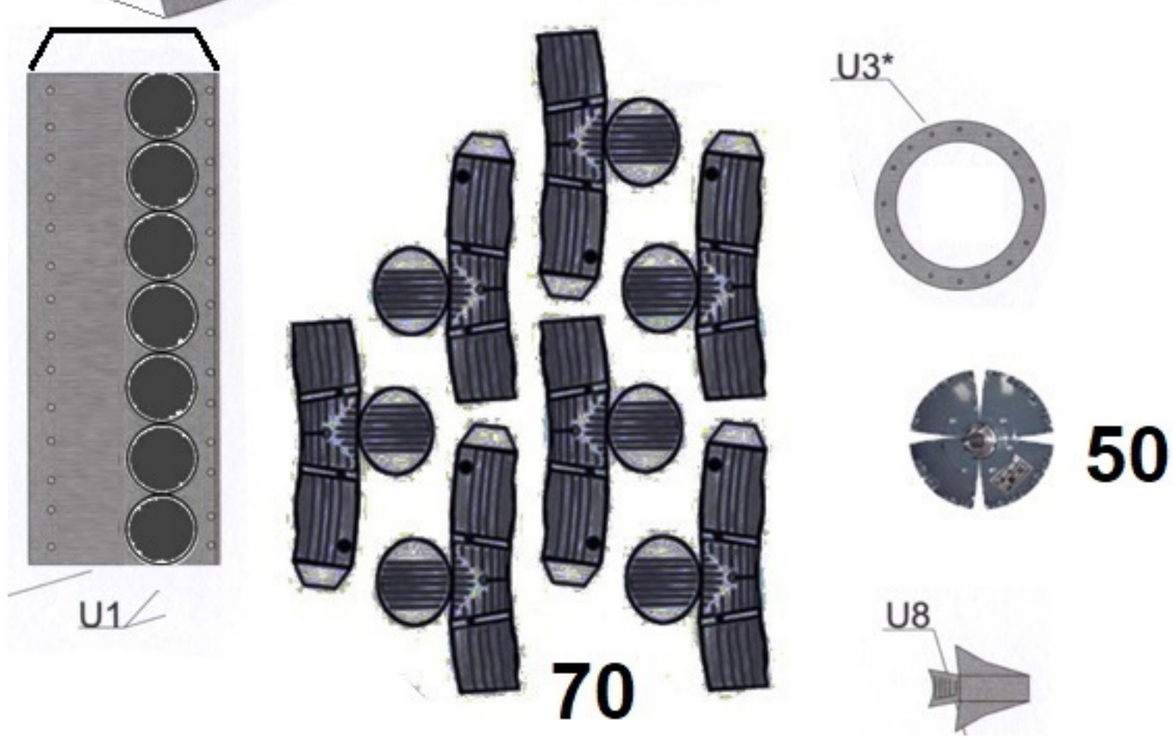

70

50

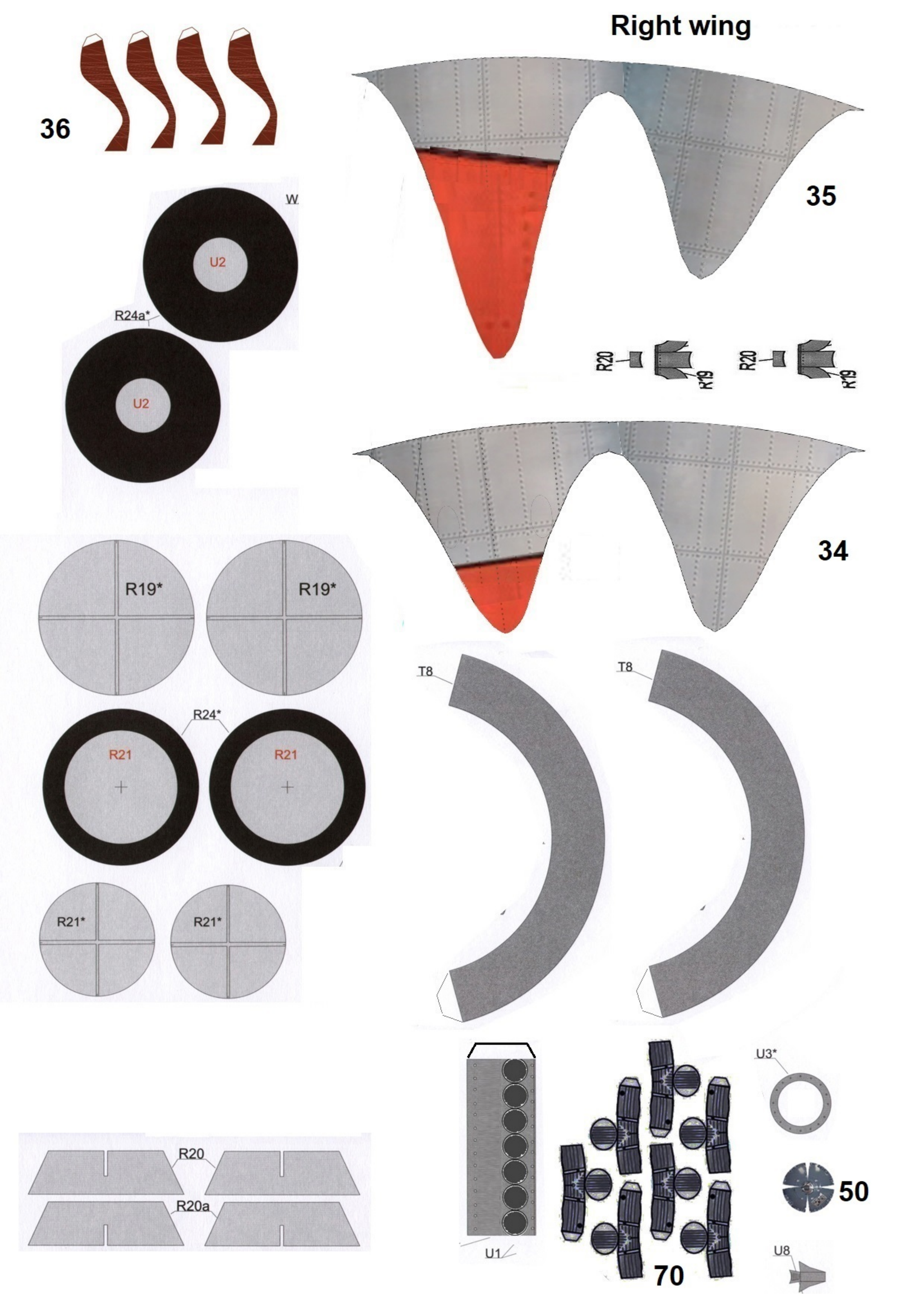
Right wing
36
35
34
W
U2
R24a*
U2
R20
R19
R20
R19
R19*
R19*
R24*
R21
R21
R21*
R21*
T8
T8
R20
R20a
U1
U3*
50
70
U8

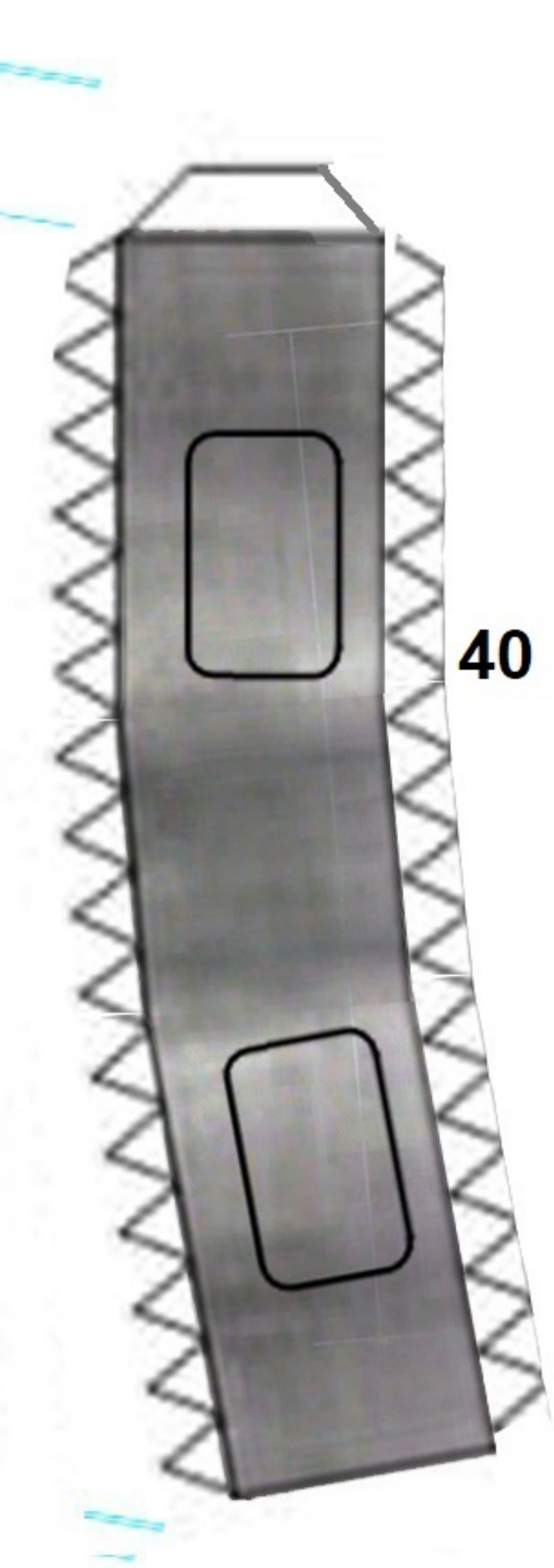

40

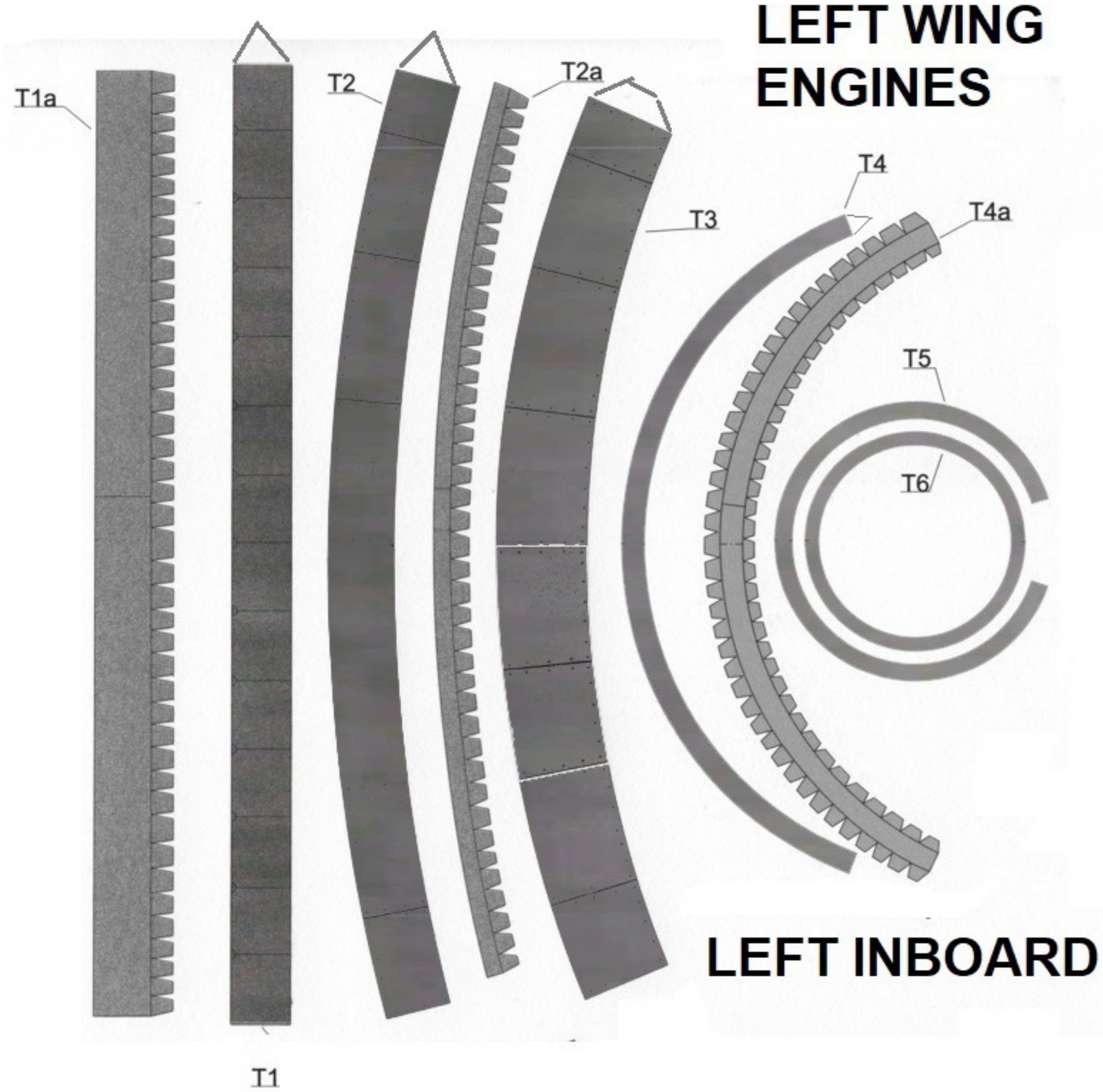

LEFT INBOARD

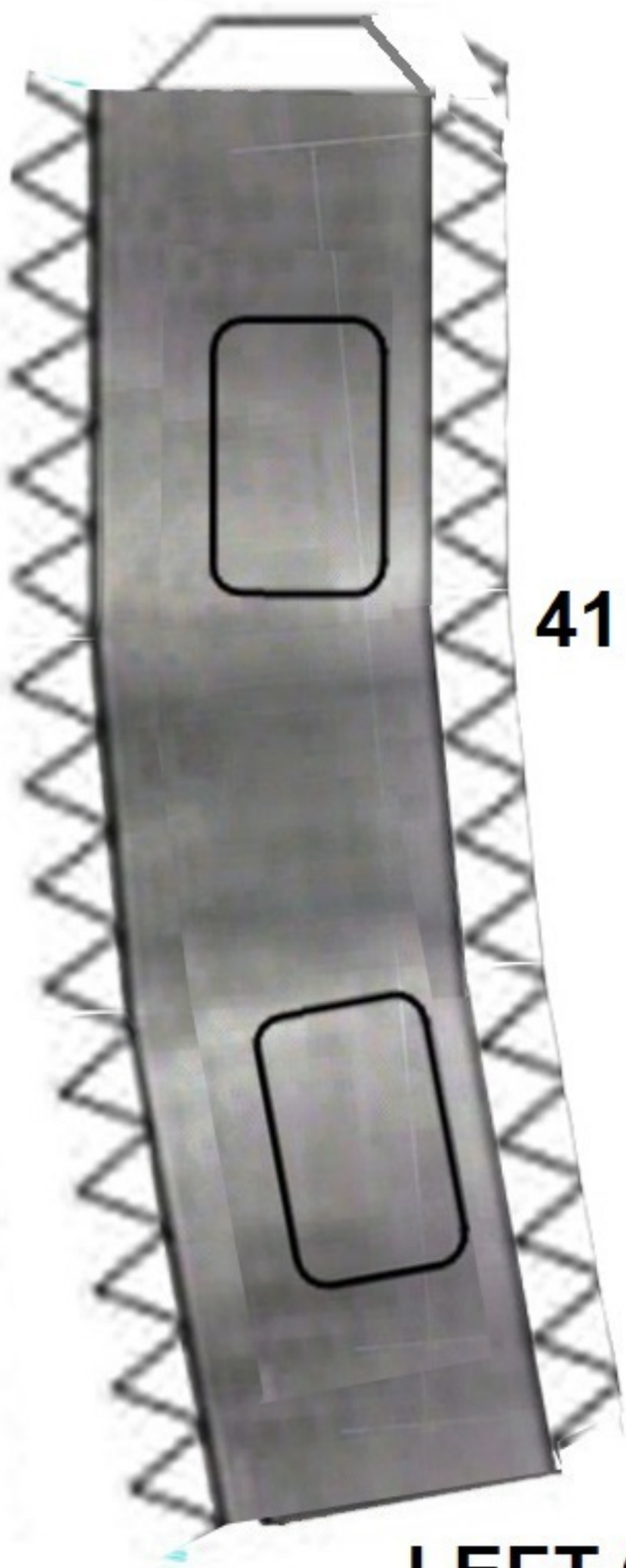

41

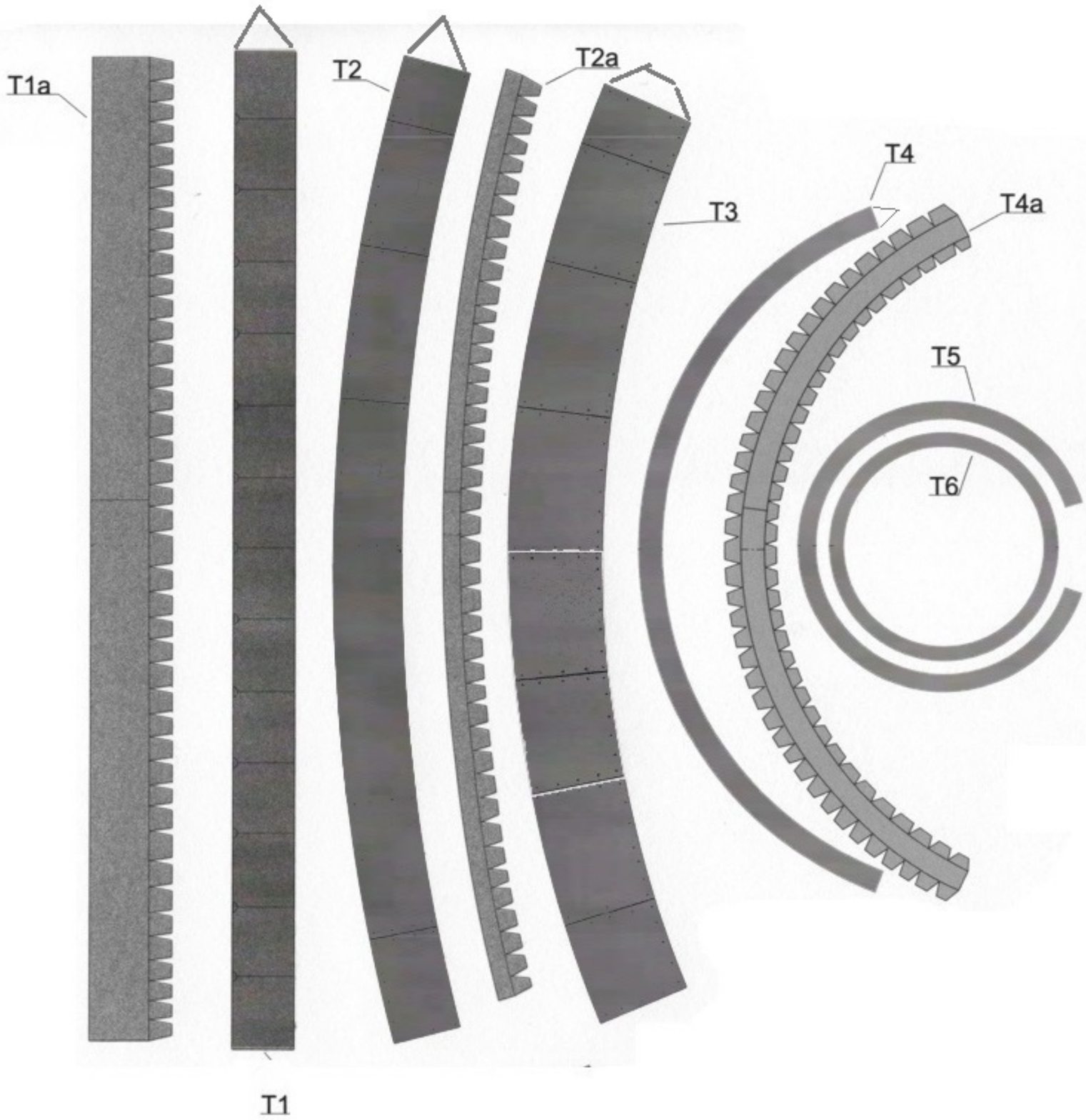

LEFT OUTBOARD

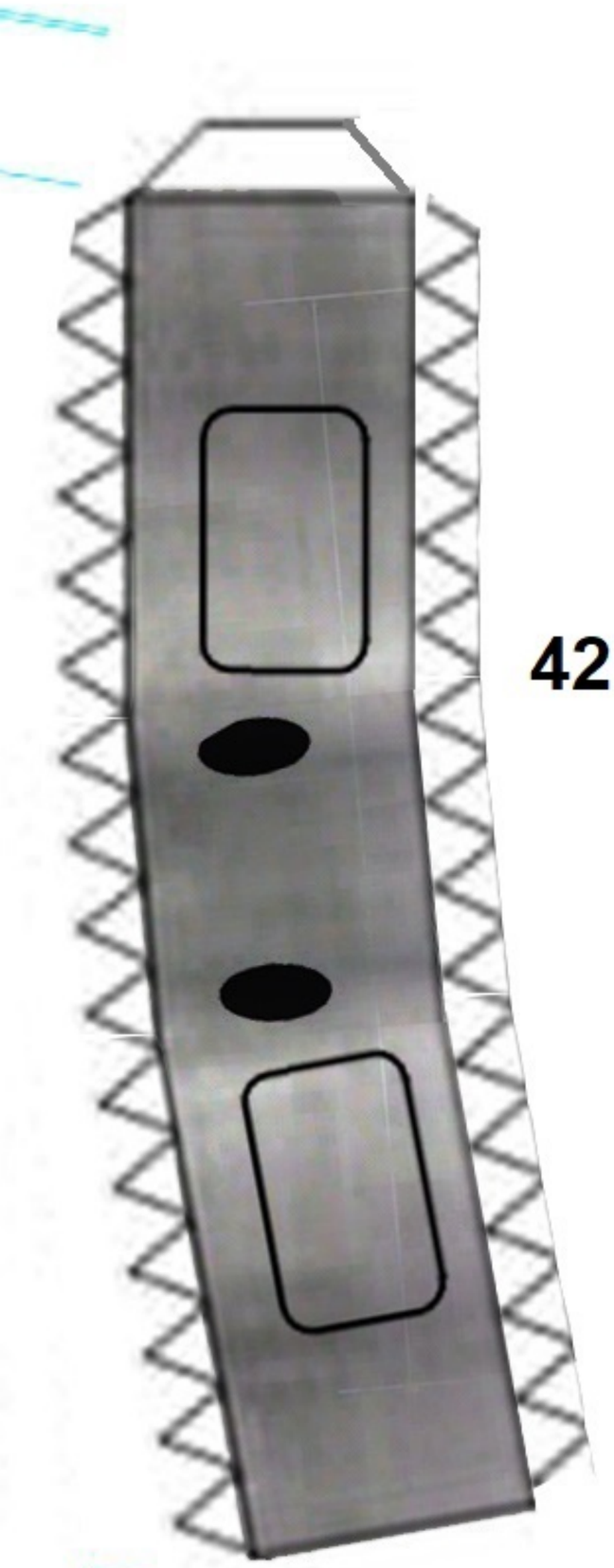

42

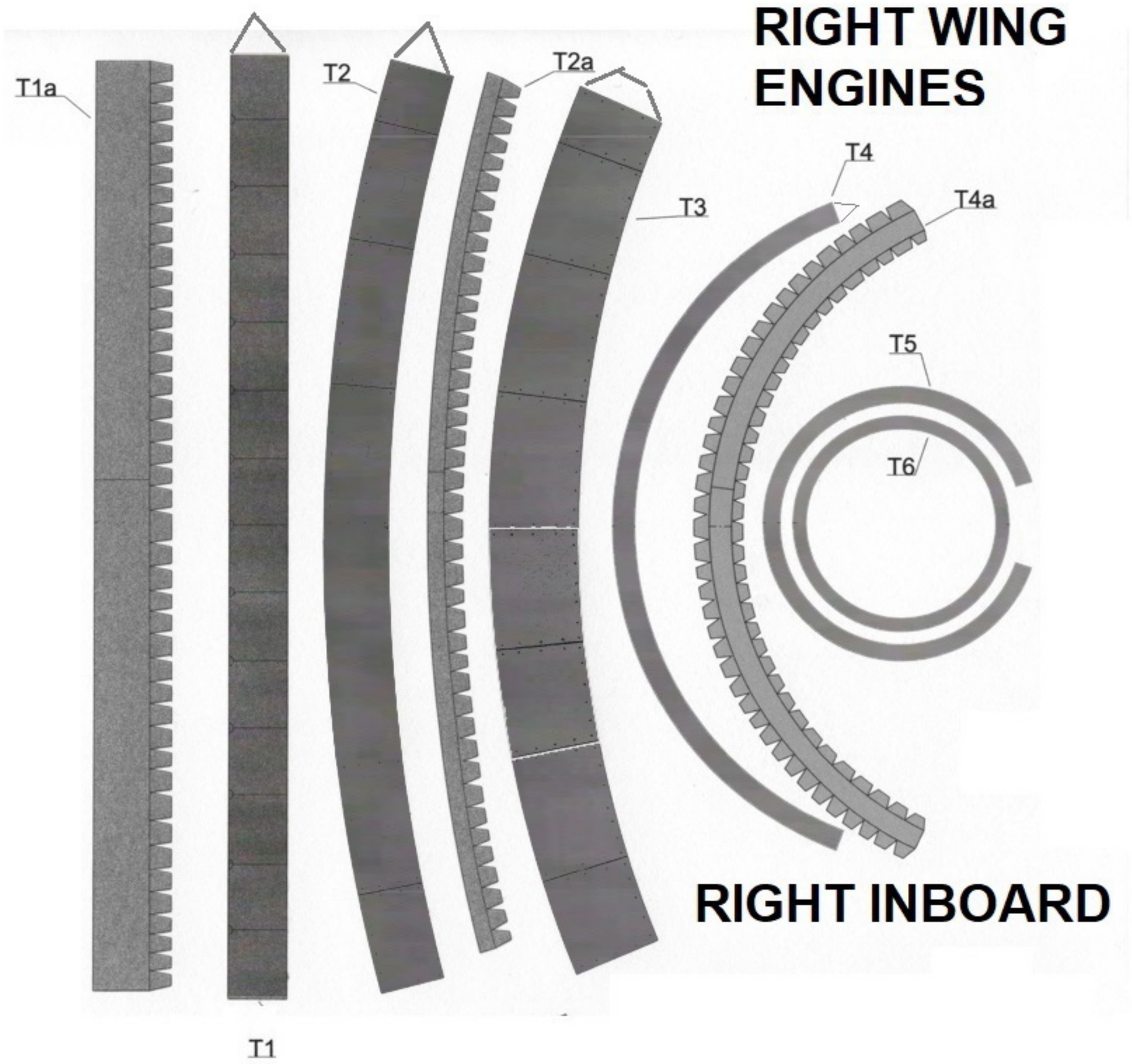

RIGHT INBOARD

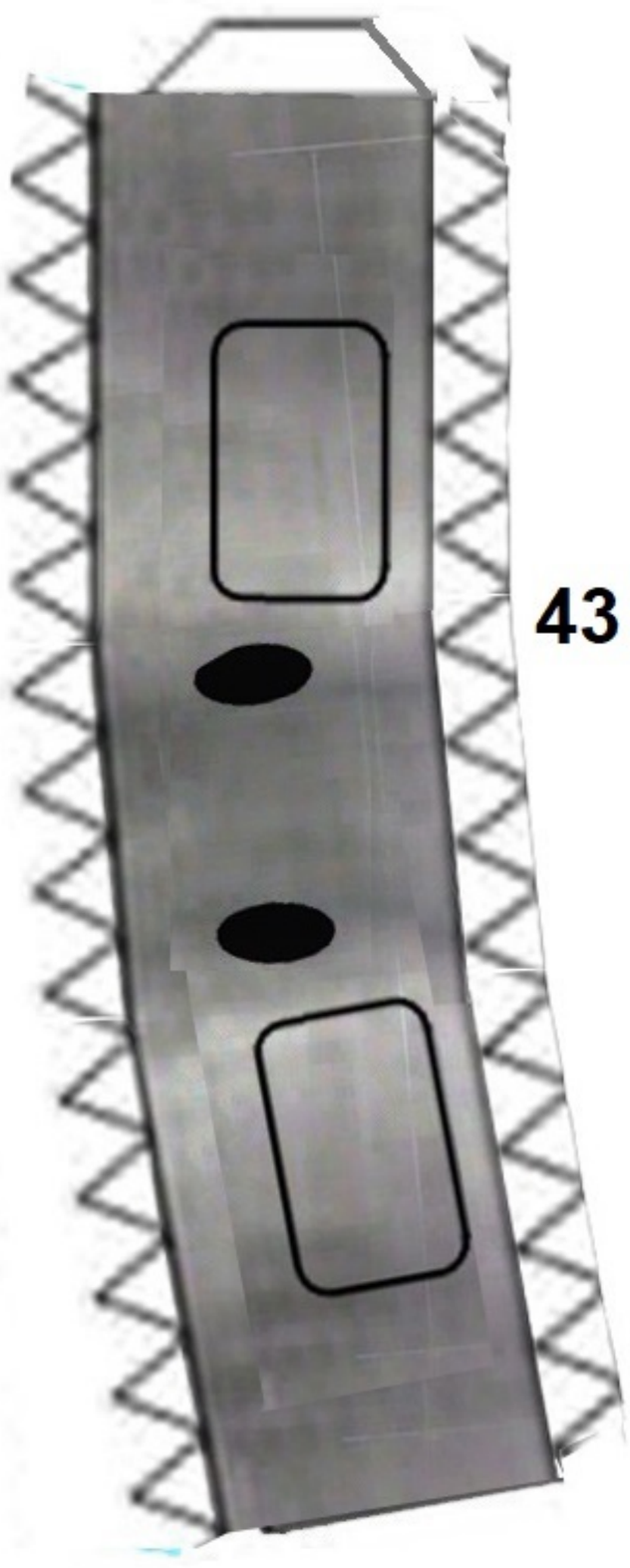

43

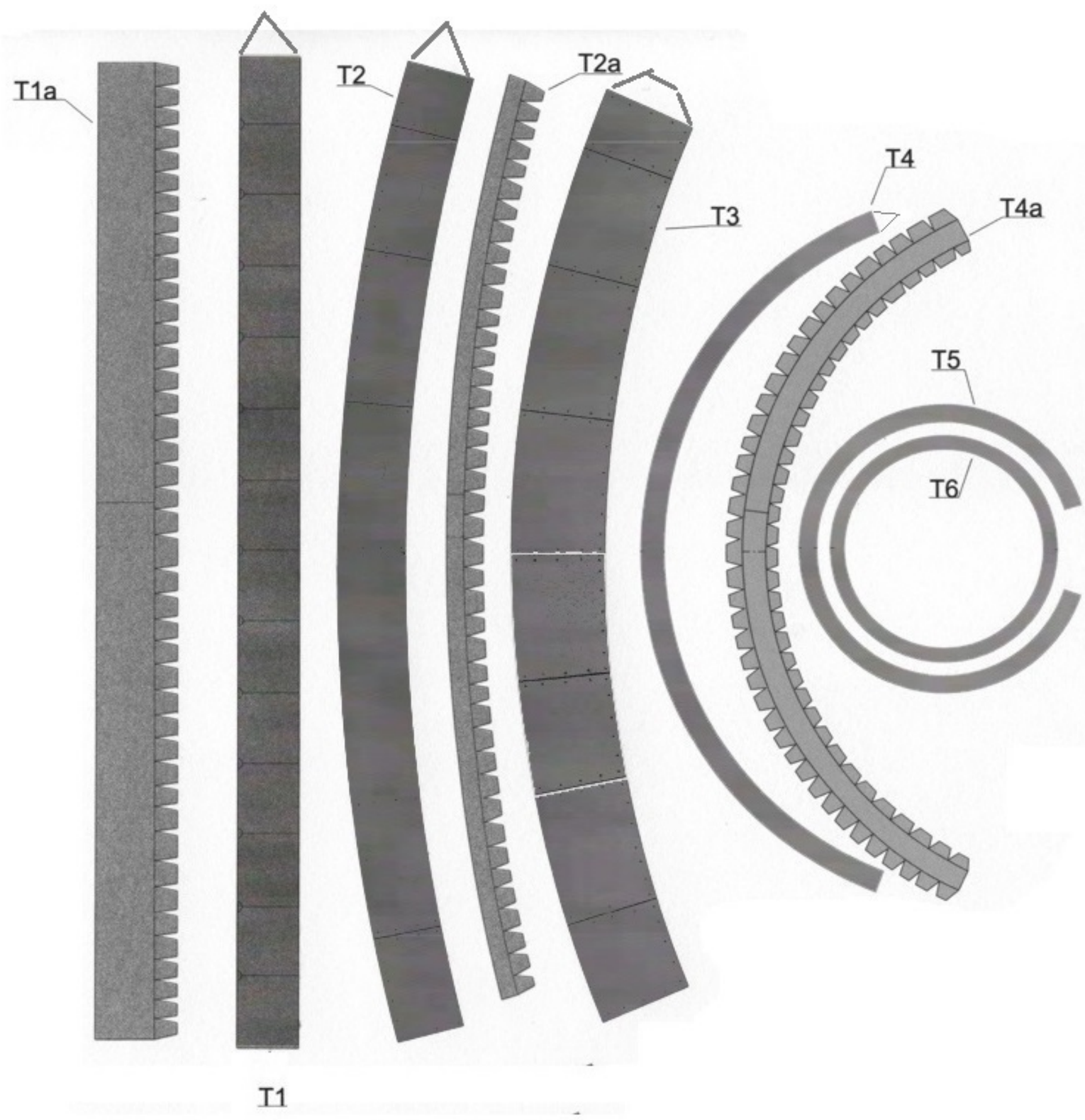

RIGHT OUTBOARD

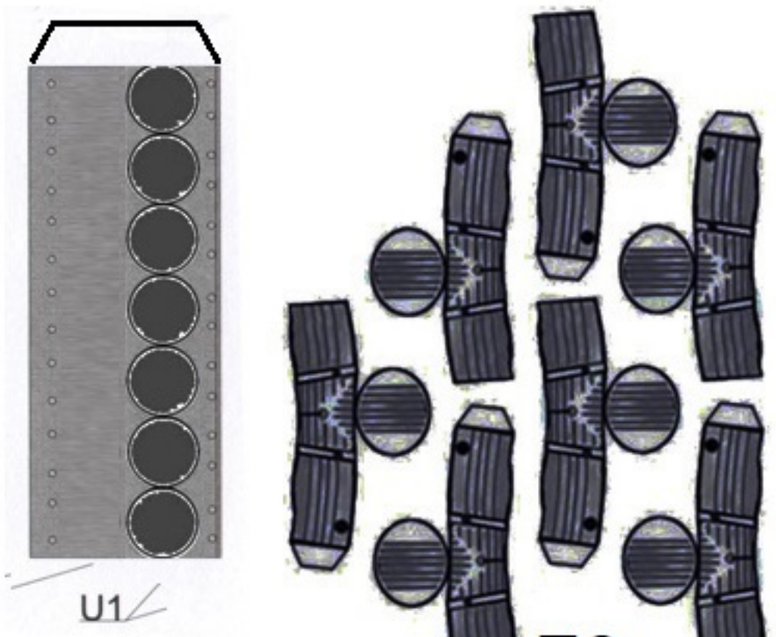
U1
70
U3*
50
U8

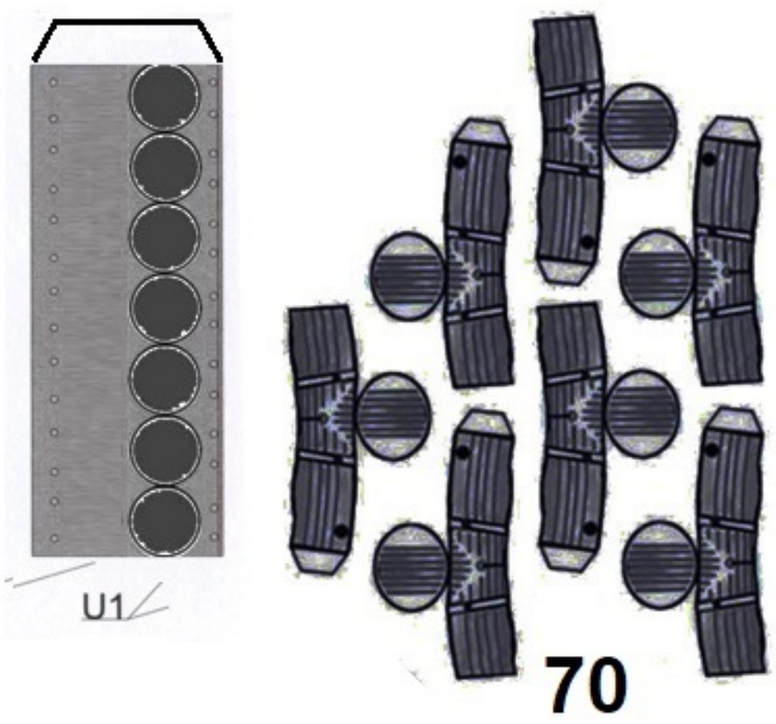
U1
70
U3*
50
U8

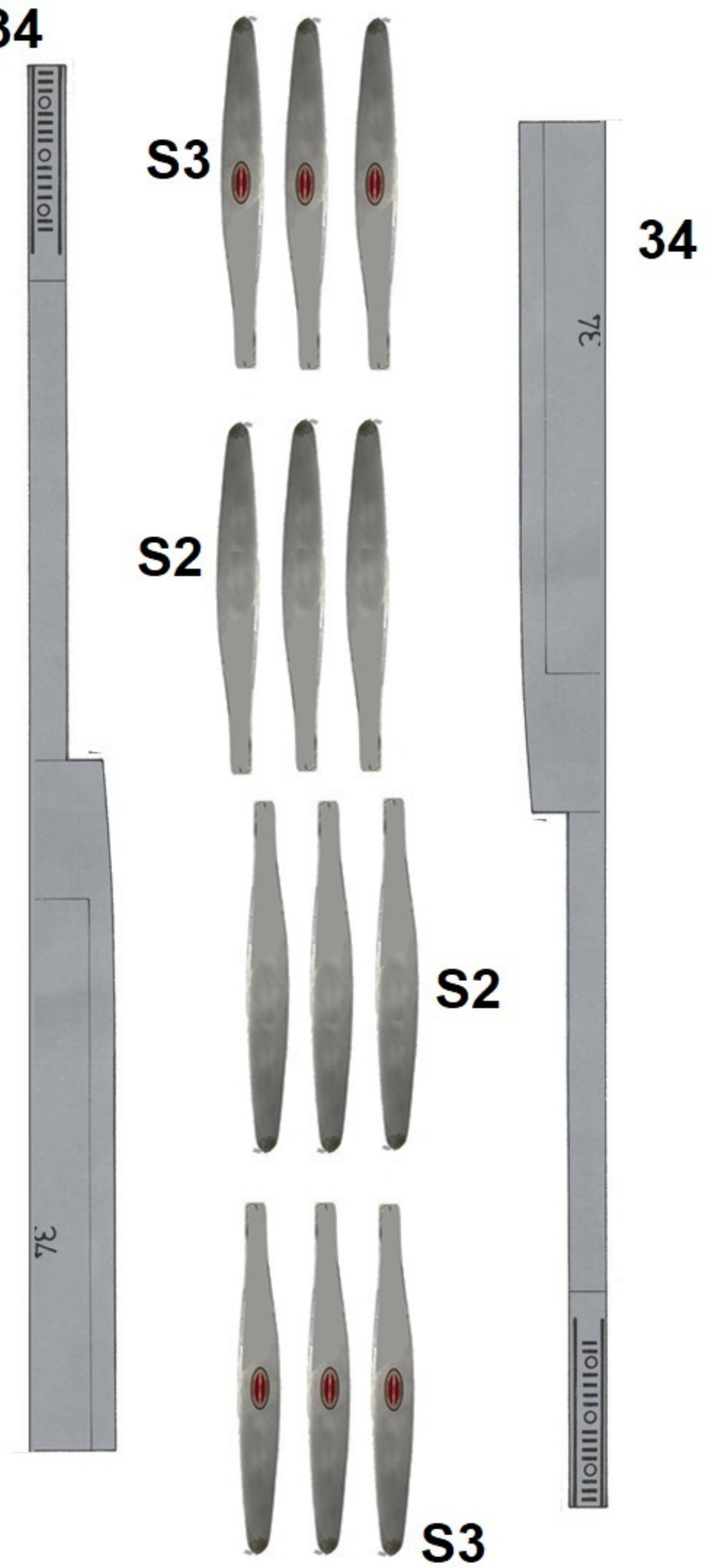
34
S3
S2
S2
S3
34
34

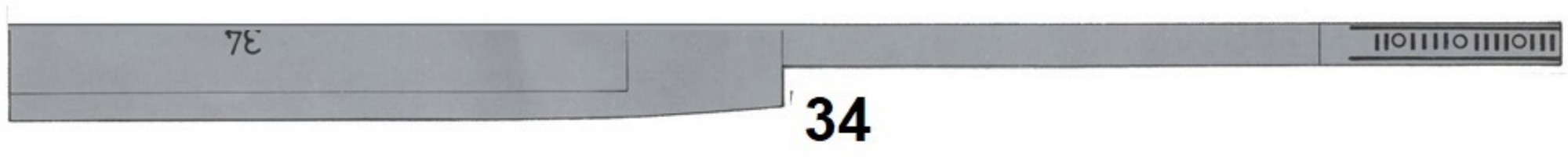
34

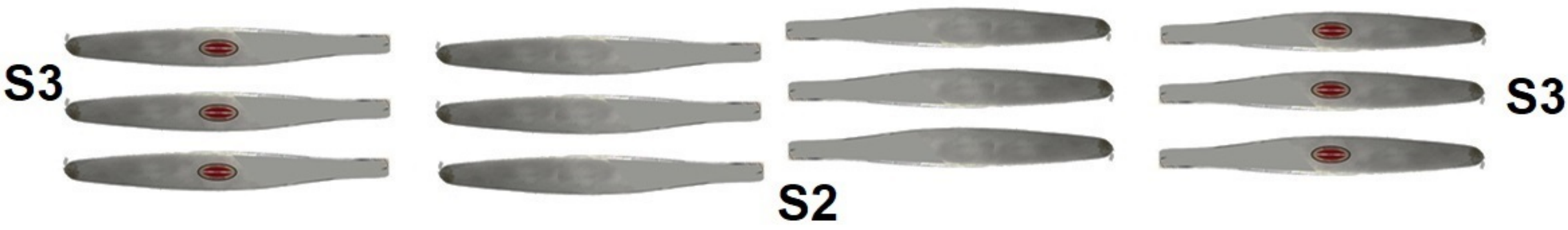
S3
S2
S3

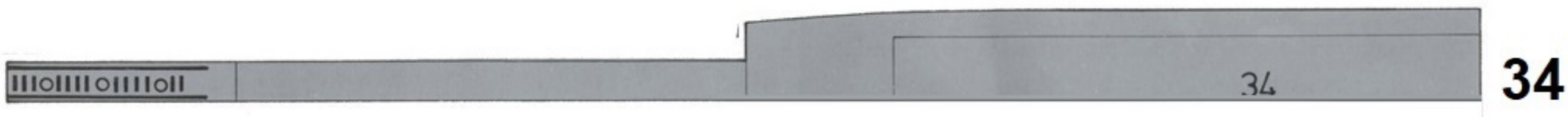
34
34

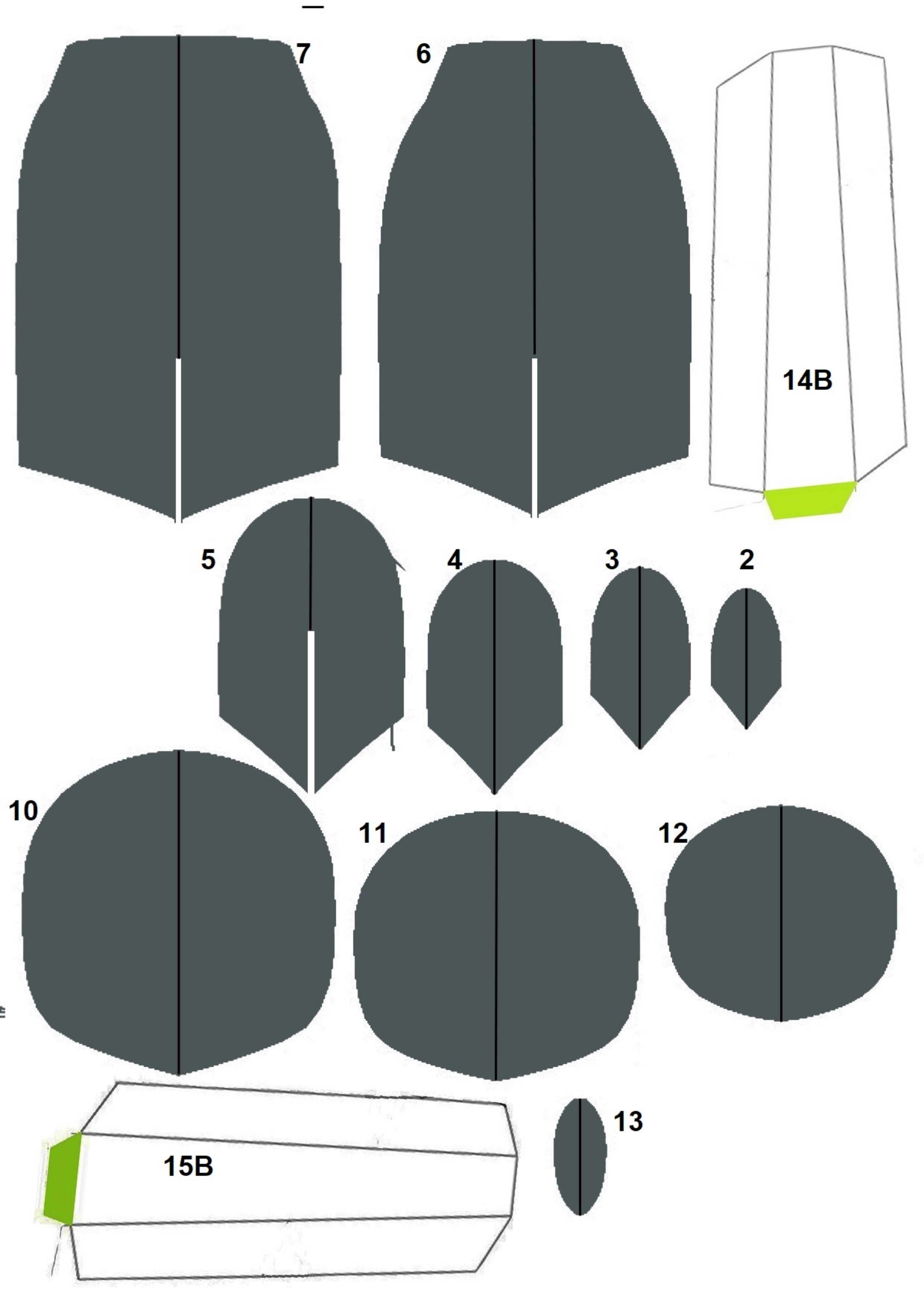
7
6
14B
5
4
3
2
10
11
12
15B
13

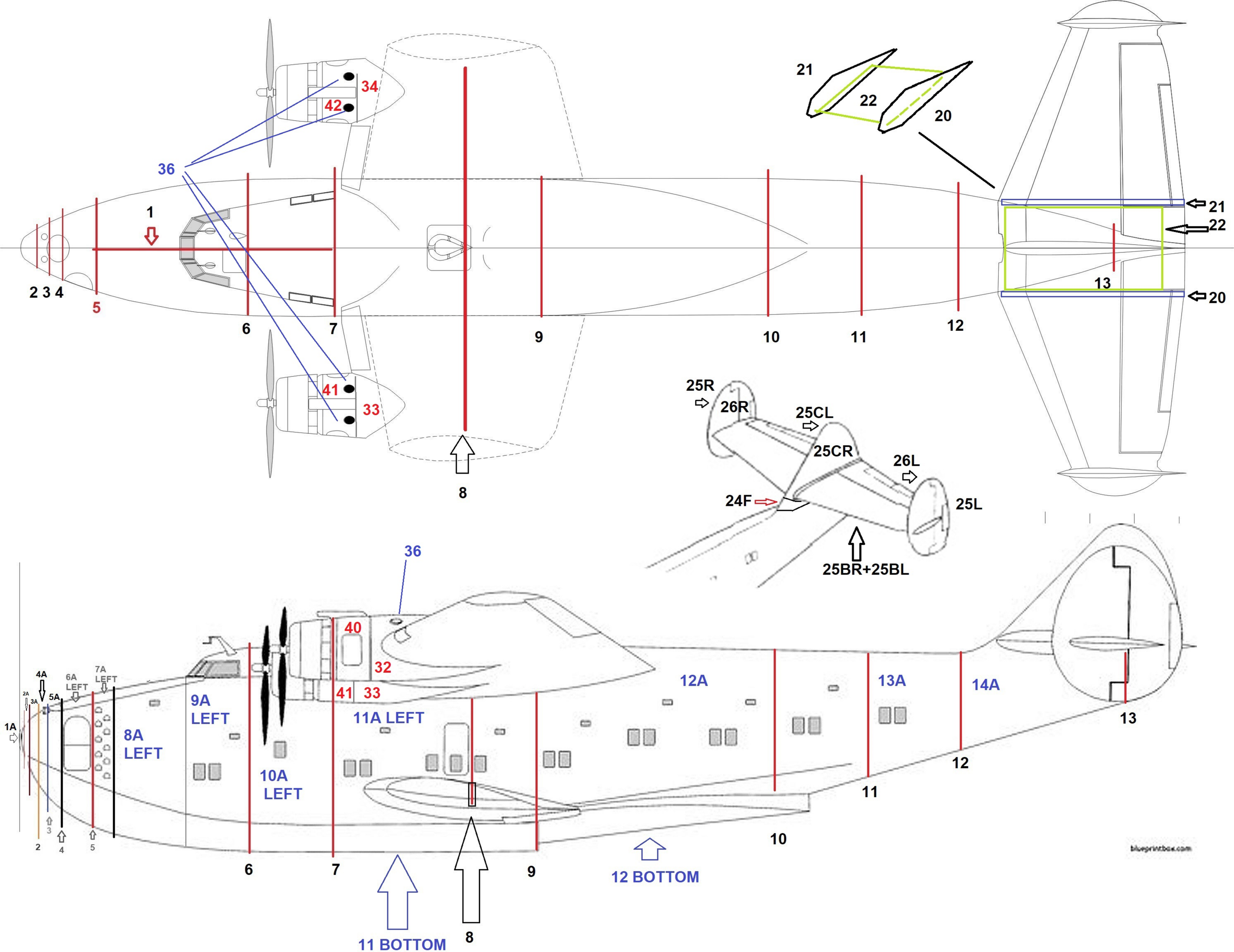
34
42
36
1
2 3 4
5
6
7
8
9
10
11
12
13
41
33
21
22
20
25R
26R
25CL
25CR
26L
24F
25L
25BR+25BL
36
40
32
41
33
4A
6A LEFT
7A LEFT
5A
1A
8A LEFT
9A LEFT
10A LEFT
11A LEFT
12A
13A
14A
2
3
4
5
6
7
8
9
10
11
12
13
11 BOTTOM
12 BOTTOM
blueprintbox.com

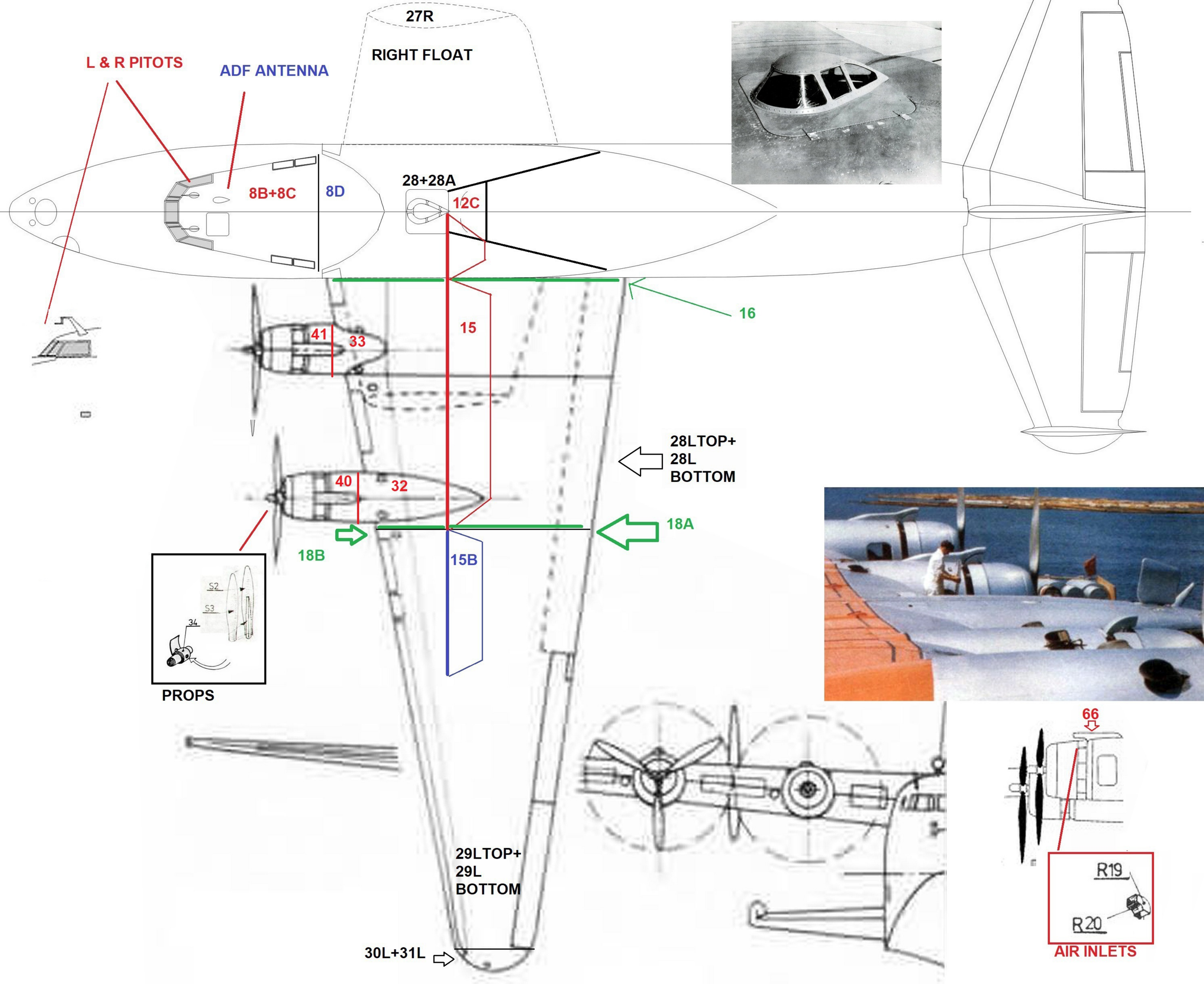
27R
RIGHT FLOAT
L & R PITOTS
ADF ANTENNA
8B+8C
8D
28+28A
12C
16
15
41
33
40
32
28LTOP+
28L
BOTTOM
18A
18B
15B
PROPS
S2
S3
34
29LTOP+
29L
BOTTOM
30L+31L
66
R19
R20
AIR INLETS
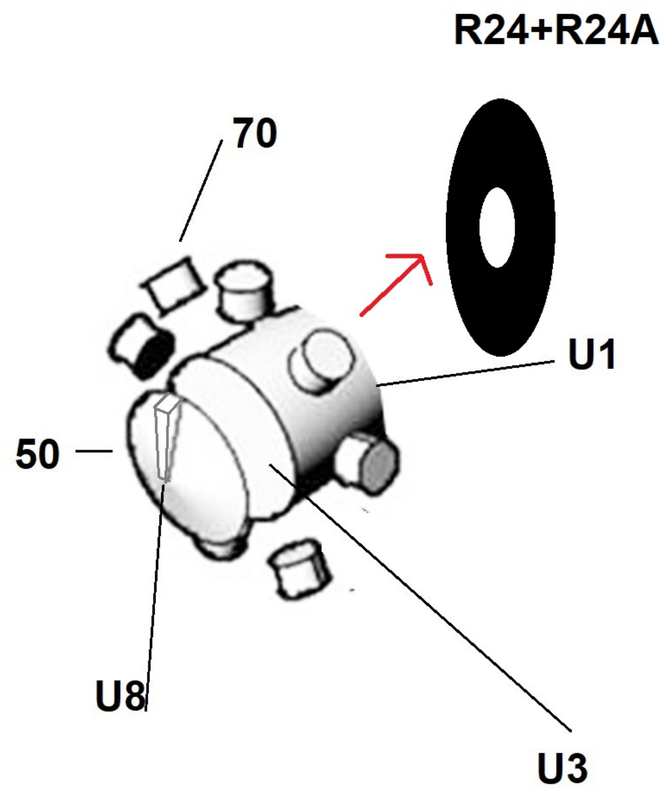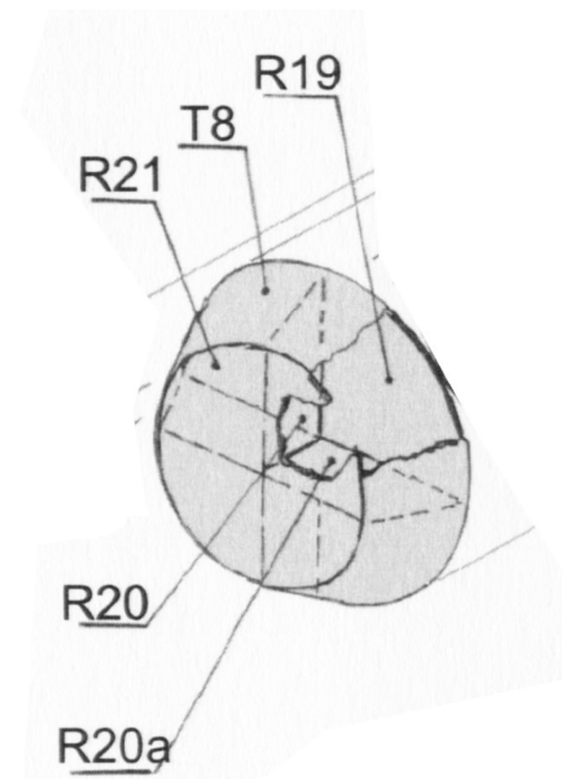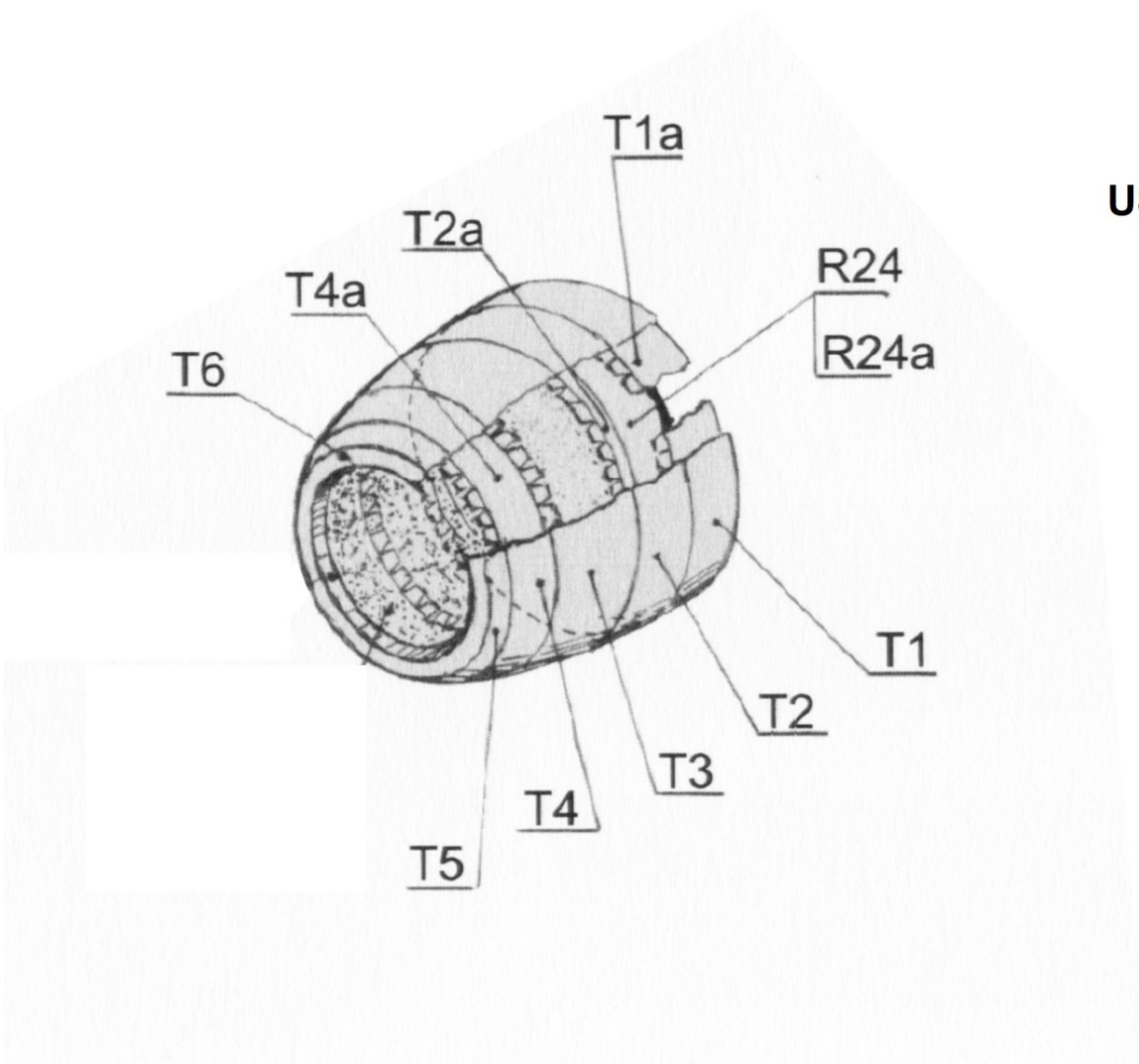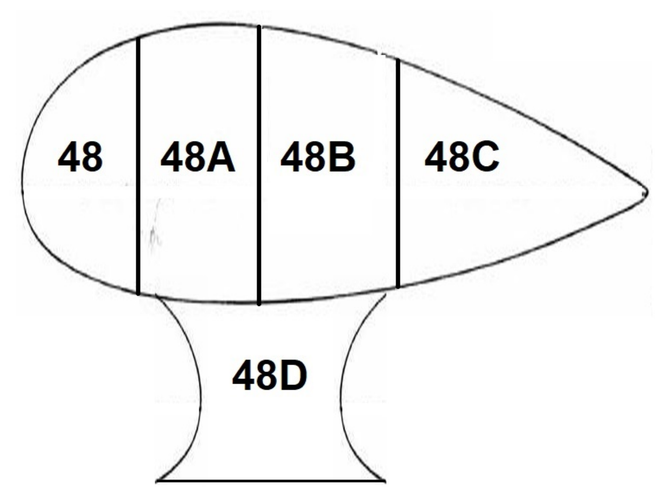
THIS IS A FREE MODEL MODEL BY TEX MOD INSPIRED IN: GARY PILSWORTH, SISSORS & PLANES, https://lutzkasper.de/, CLIPPER 314 BY BARRY, ORLYK MODELS, FIDDLERS GREEN, AND AIRFIX BOEING 314 PLASTIC KIT.